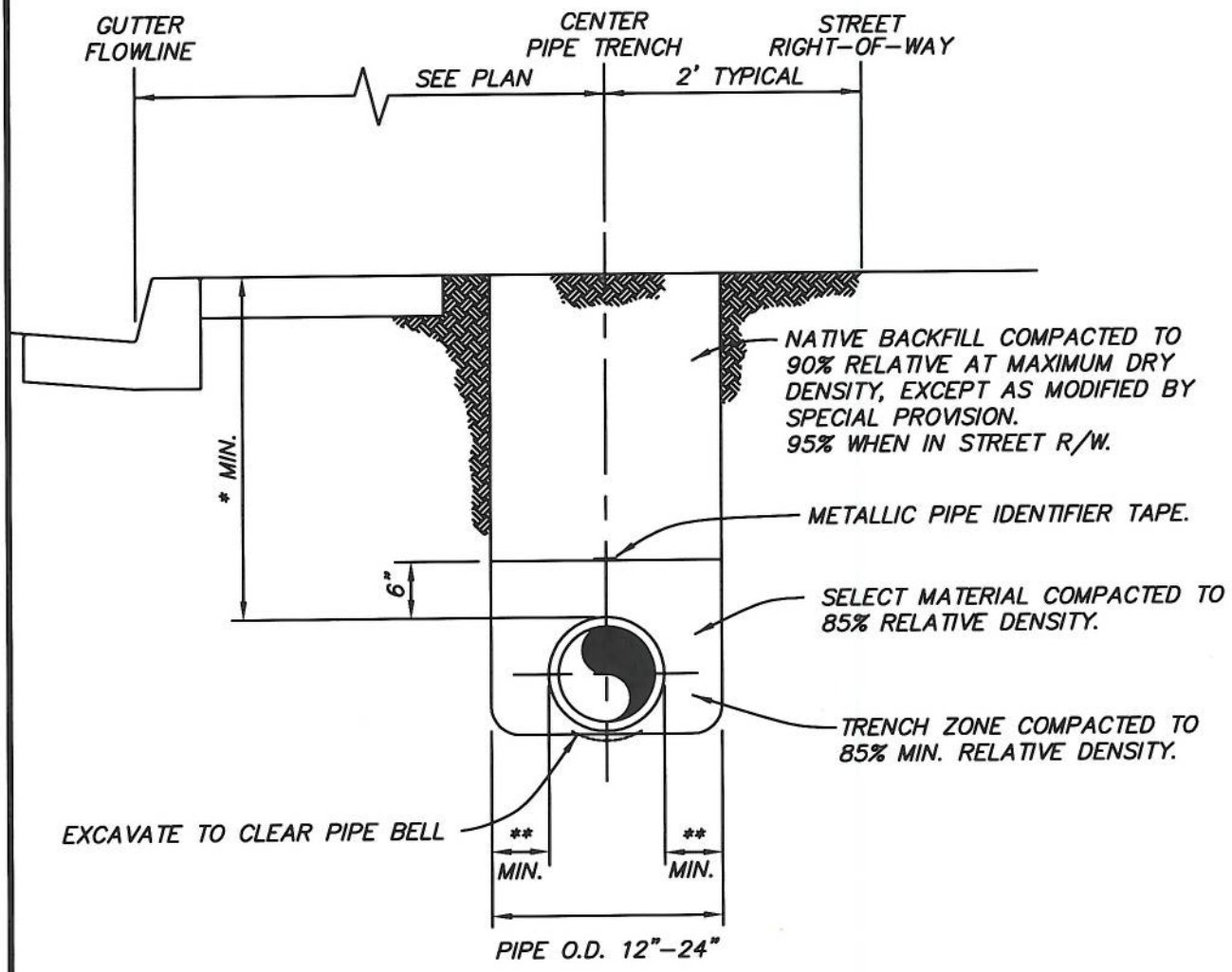

* 42" MINIMUM FOR 12" DIAMETER MAINS & SMALLER
48" MINIMUM FOR LARGER THAN 12" DIAMETER PIPE

**6" MINIMUM FOR MAINS LESS THAN 12" DIAMETER
12" MINIMUM FOR MAINS 12" DIAMETER AND GREATER

NOTES:

1) WATER MAIN SHALL BE LOCATED 2' FROM RIGHT-OF-WAY WHEN POSSIBLE.

2) IN PAVED AREA MINIMUM COVER SHALL BE MEASURED FROM LOWEST GUTTER FLOWLINE GRADE.

3) IN PAVED AREAS, SPECIFICATIONS FOR STREET STRUCTURAL SECTION, OR PAVEMENT PATCHING SPECIFICATION SHALL SUPERCEDE BACKFILL AND COMPACTION STATED.

WATER RESOURCES DEPARTMENT
CITY OF BAKERSFIELD, CALIFORNIA

STANDARD PIPE TRENCH

APPROVED: Art Chiarello 6/14/2016
MANAGER – WATER RESOURCES DEPARTMENT DATE

PLATE No. W-1
REV. 1-9-09

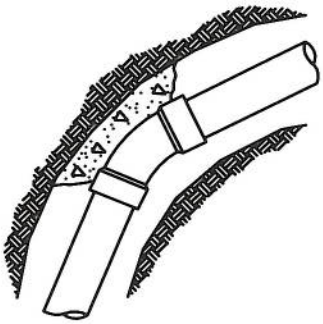

22 1/2° ELL

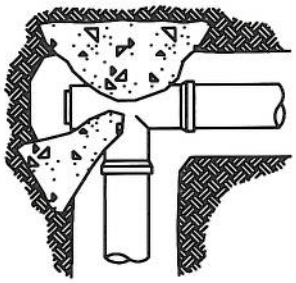

TEE

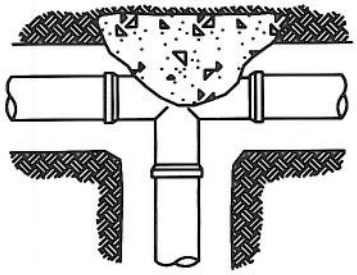

TEE

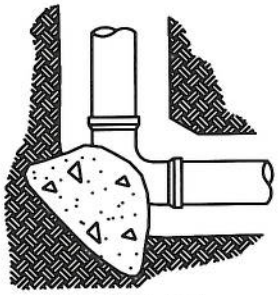

90° ELL

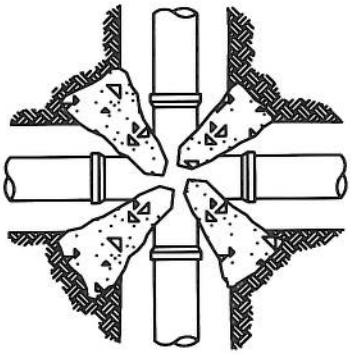

CROSS

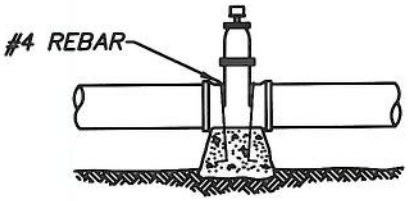

VALVE ANCHOR

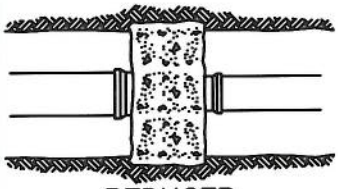

REDUCER

THRUST BLOCK SCHEDULE						
BEARING AREA IN SQUARE FEET						
PIPE SIZE	TEE OR PLUG	90°ELL	45°ELL	22 1/2° ELL	CROSS	VALVE
4"–6"	3	4	2	2	1.5 EA.	3.0
8"	5	7	4	2	3.0 EA.	5.5
10"	8	11	6	3	4.5 EA.	9.0
12"	11	16	8	4	6.5 EA.	13.0
16"	16	23	13	7	8.0 EA.	16.0

NOTES:

1) ALL VALVES, FITTINGS, AND DIRECTIONAL CHANGES ARE TO BE HELD IN PLACE BY CONCRETE THRUSTS BLOCKS.

2) BEARING AREAS INDICATED ARE BASED ON ALLOWABLE SOIL PRESSURE OF 1500 PSF.

3) CONCRETE IS NOT TO BEAR AGAINST PIPE. THRUST BLOCK TO ONLY BE IN CONTACT WITH FITTING.

4) THRUST BLOCKS SHALL BE POURED AGAINST UNDISTURBED SOIL.

5) JOINTS SHALL BE KEPT CLEAR OF CONCRETE.

6) THRUST BLOCKS SHALL BE CLASS "B" CONCRETE HAVING A MINIMUM OF 5 SACKS PORTLAND CEMENT (470 LBS./CY) & A MINIMUM ULTIMATE COMPRESSIVE STRENGTH OF 3000 psi.

WATER RESOURCES DEPARTMENT
CITY OF BAKERSFIELD, CALIFORNIA

THRUST BLOCK DETAIL

APPROVED: 6/14/2016

MANAGER – WATER RESOURCES DEPARTMENT — DATE

PLATE No. W–2

REV. 3–22–16

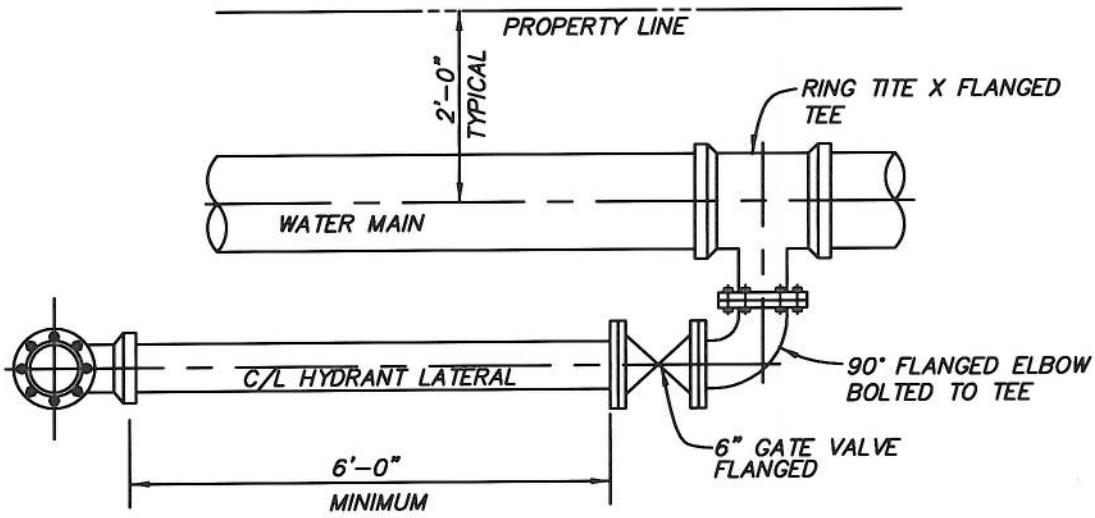

PLAN VIEW

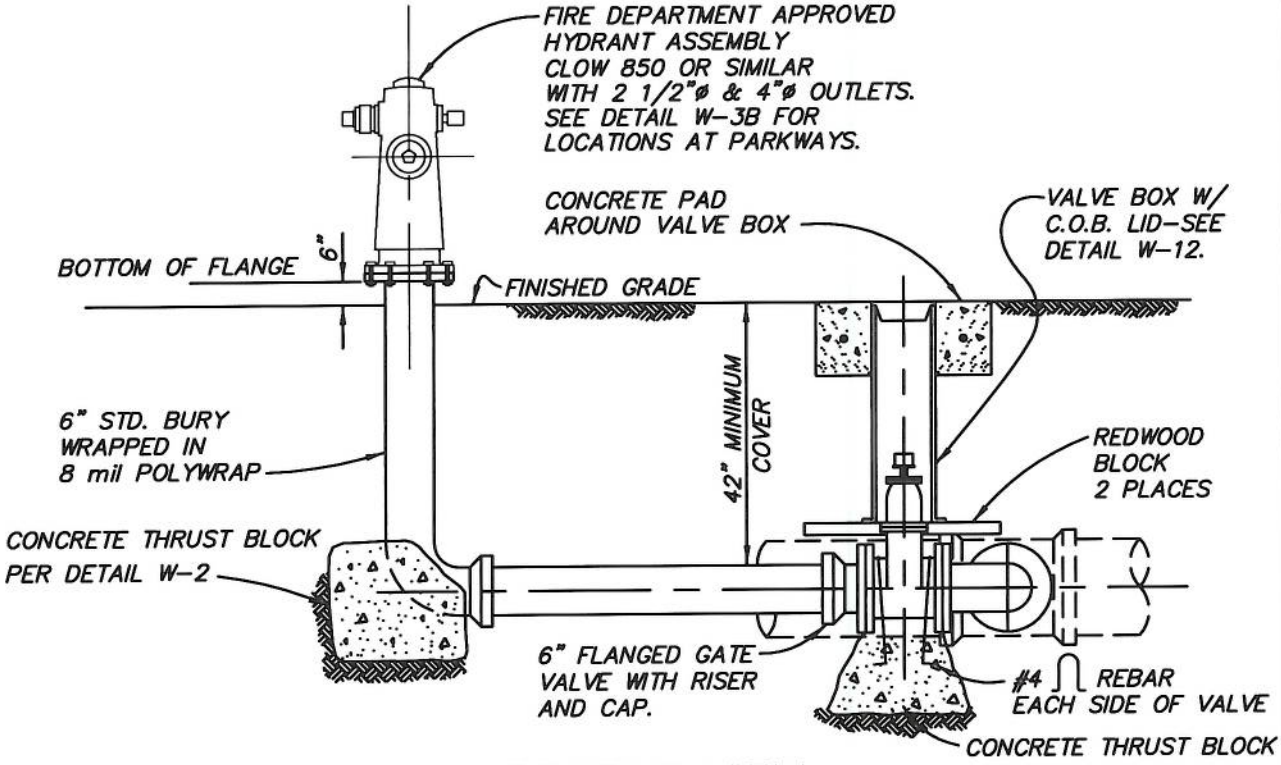

PROFILE VIEW

NOTE: 36" MINIMUM CLEAR SPACE SHALL BE MAINTAINED AROUND FIRE HYDRANTS.

WATER RESOURCES DEPARTMENT
CITY OF BAKERSFIELD, CALIFORNIA

FIRE HYDRANT ASSEMBLY

APPROVED: 6/14/2016

MANAGER – WATER RESOURCES DEPARTMENT — DATE

PLATE No. W-3

REV. 3-22-16

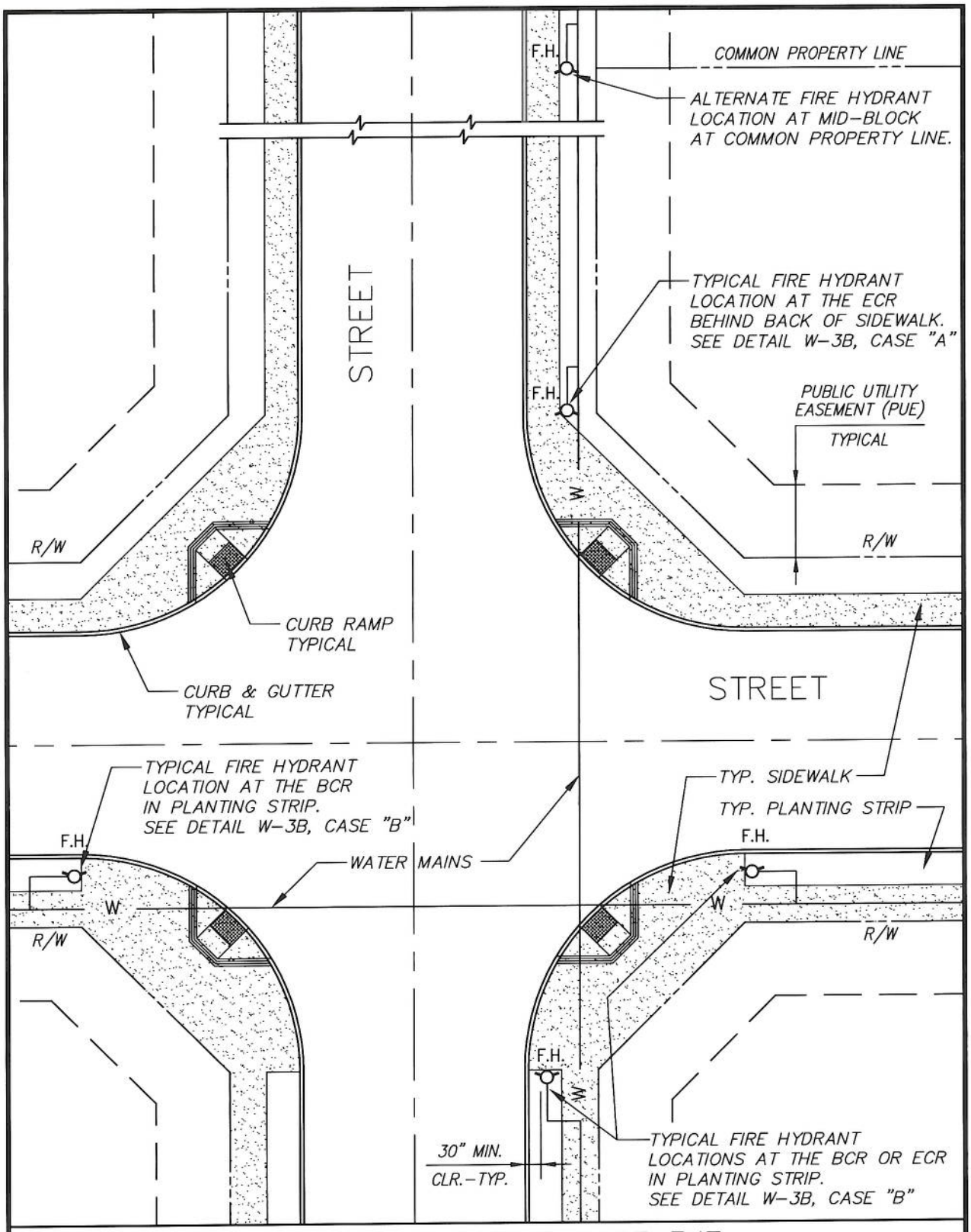

WATER RESOURCES DEPARTMENT
CITY OF BAKERSFIELD, CALIFORNIA

TYP. WATER MAIN & FIRE HYDRANT LOCATIONS

APPROVED: 6/14/2016

MANAGER – WATER RESOURCES DEPARTMENT DATE

PLATE No. W-3A

REV. 9-16-14

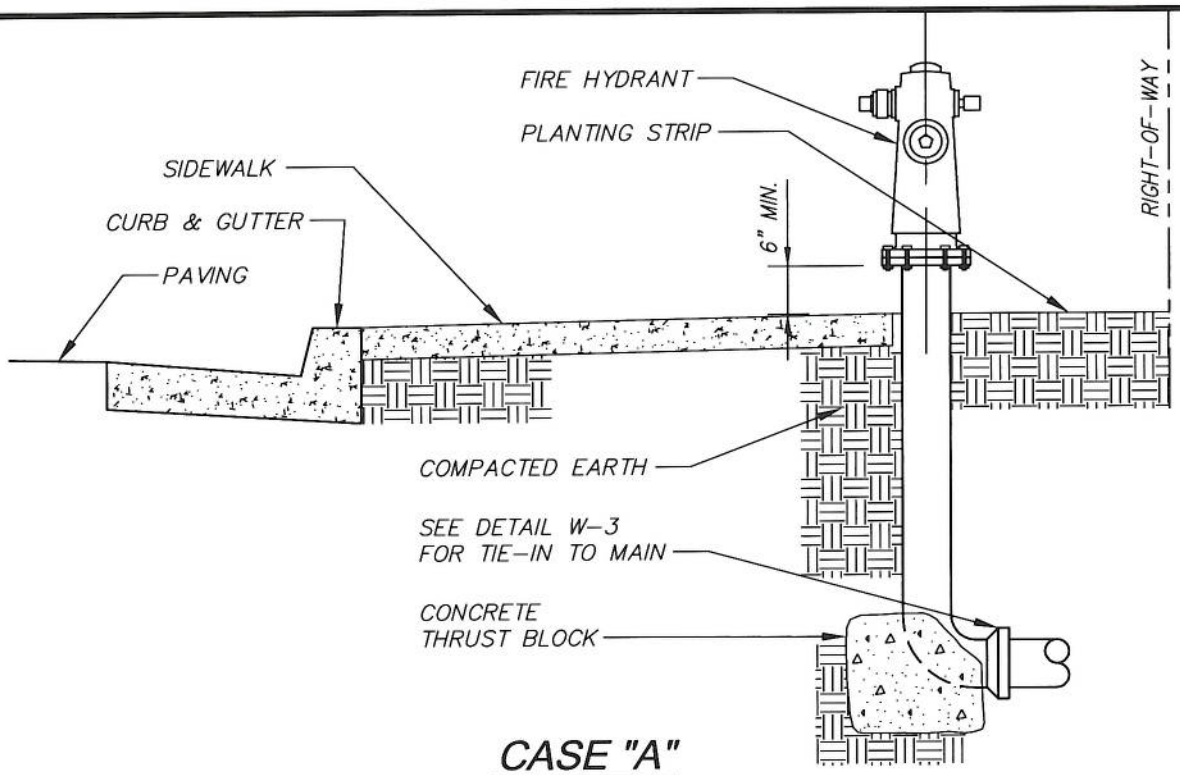

CASE "A"

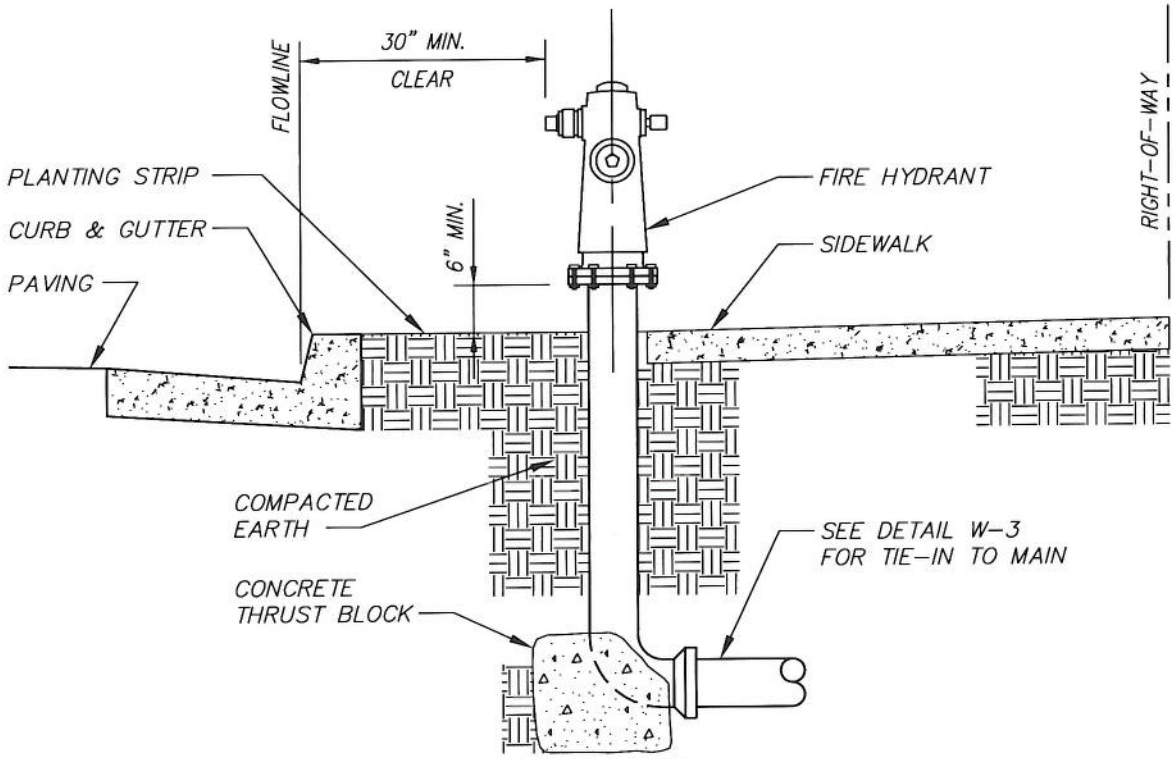

CASE "B"

WATER RESOURCES DEPARTMENT
CITY OF BAKERSFIELD, CALIFORNIA

FIRE HYDRANT AT PARKWAY

APPROVED: 6/14/2016

MANAGER – WATER RESOURCES DEPARTMENT DATE

PLATE No. W–3B

REV. 9–16–14

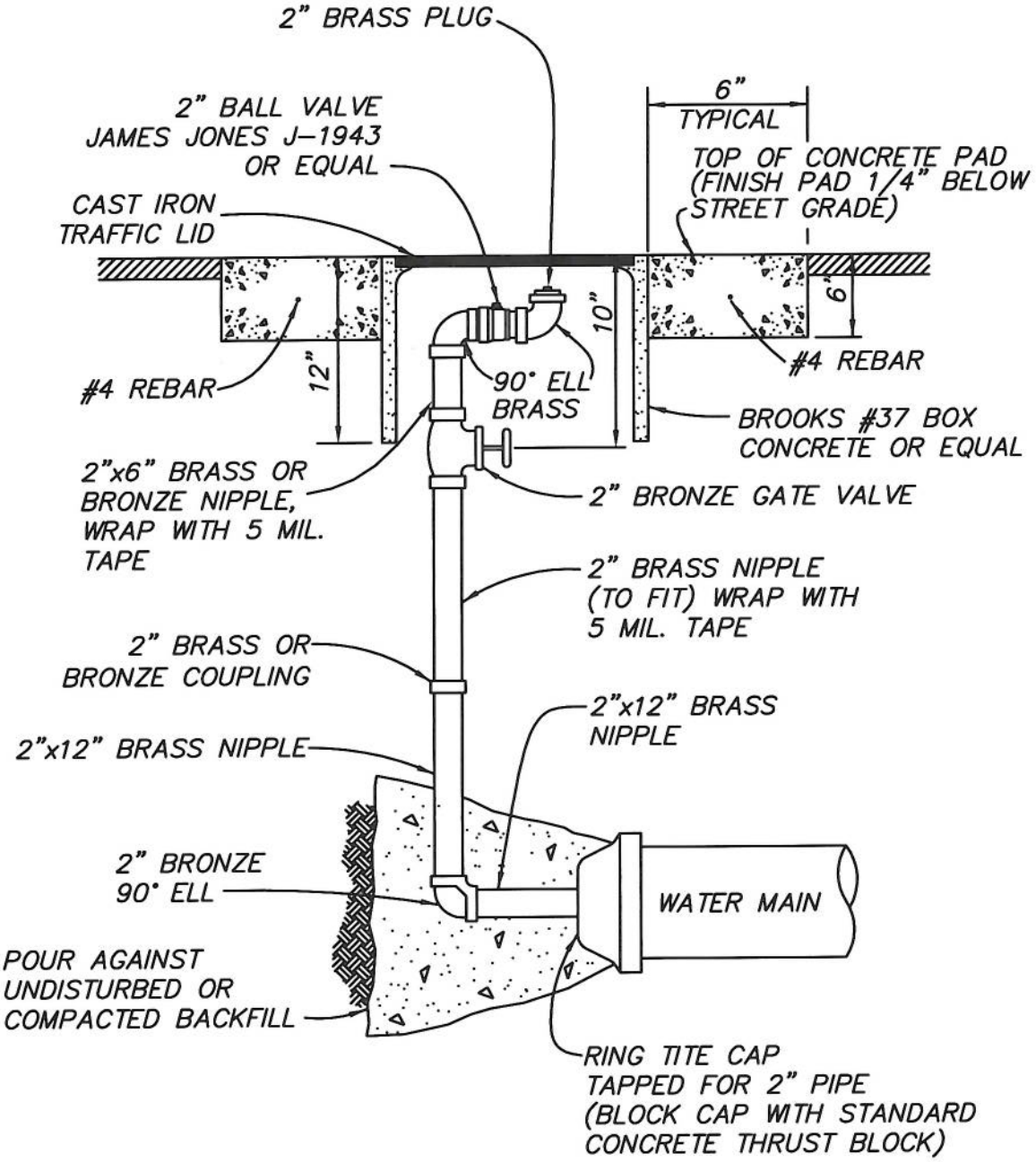

WATER RESOURCES DEPARTMENT
CITY OF BAKERSFIELD, CALIFORNIA

BLOWOFF ASSEMBLY – PAVED AREA

APPROVED:		PLATE No.
MANAGER – WATER RESOURCES DEPARTMENT	6/14/2016 DATE	W–4 REV. 1–9–09

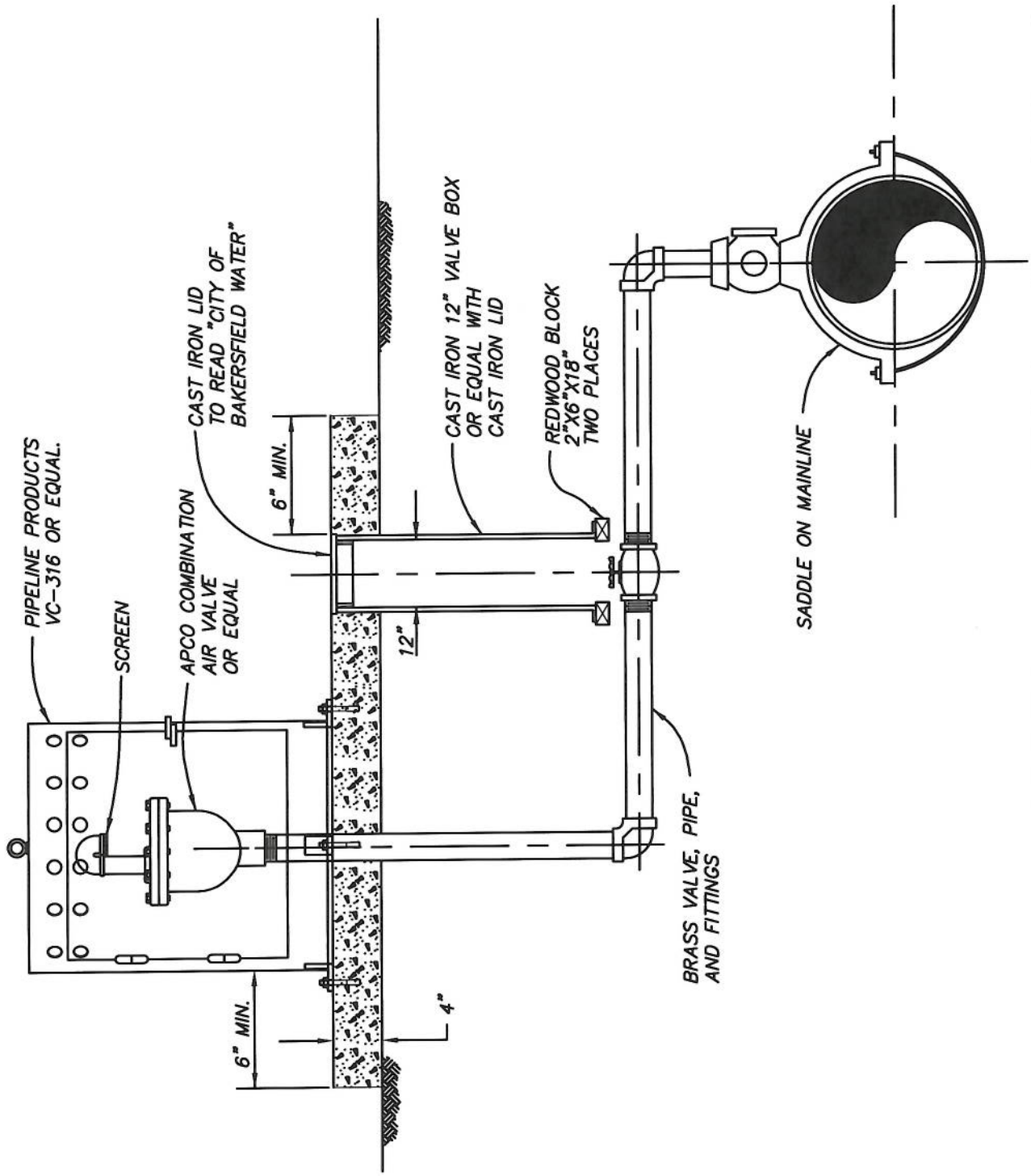

WATER RESOURCES DEPARTMENT
CITY OF BAKERSFIELD, CALIFORNIA

COMBINATION AIR VALVE

APPROVED: 6/14/2016

MANAGER – WATER RESOURCES DEPARTMENT — DATE

PLATE No. W–5

REV. 1–27–11

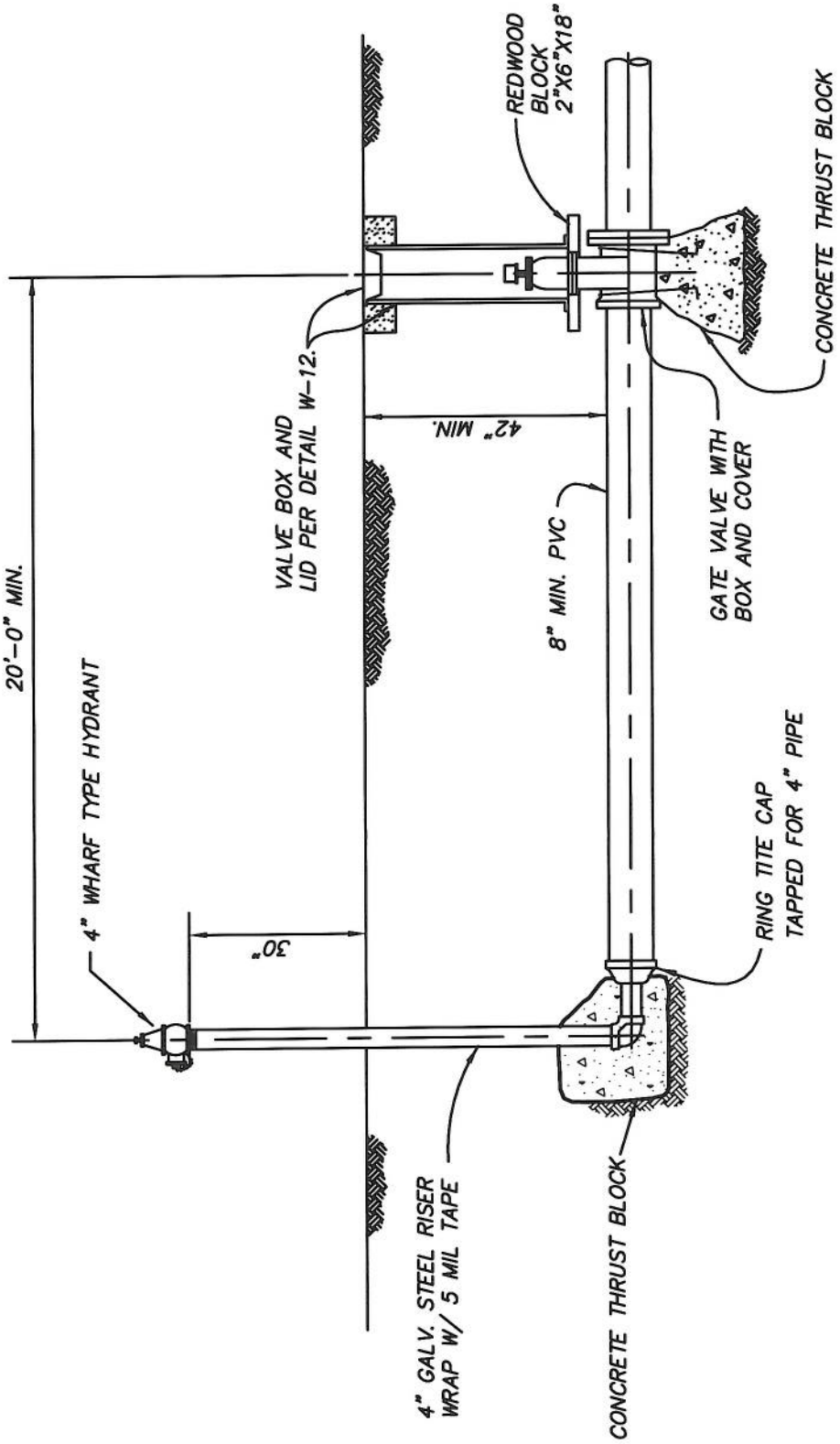

PROFILE VIEW

WATER RESOURCES DEPARTMENT
CITY OF BAKERSFIELD, CALIFORNIA

END OF LINE-BLOWOFF ASSEMBLY-UNPAVED AREA

APPROVED: 6/14/2016

MANAGER — WATER RESOURCES DEPARTMENT DATE

PLATE No. W—6

REV. 9—16—14

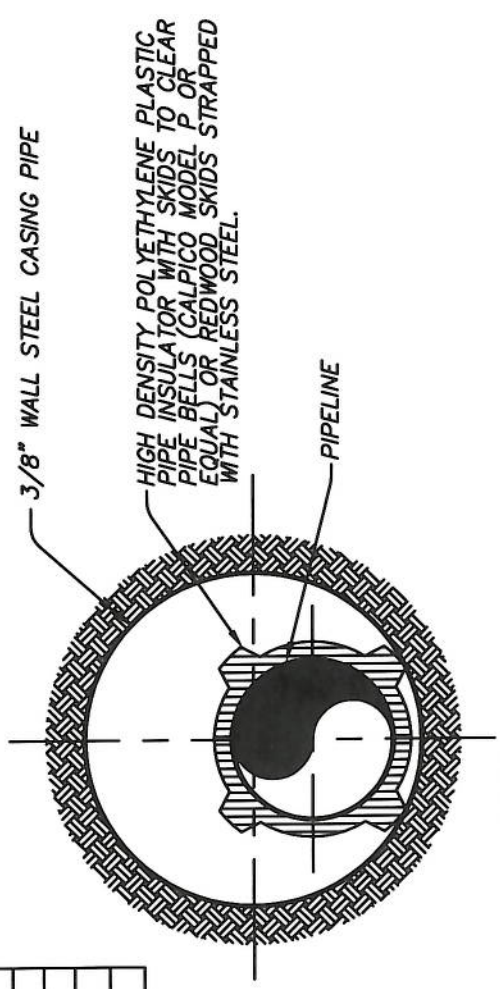

SECTION A–A
PIPE CASING

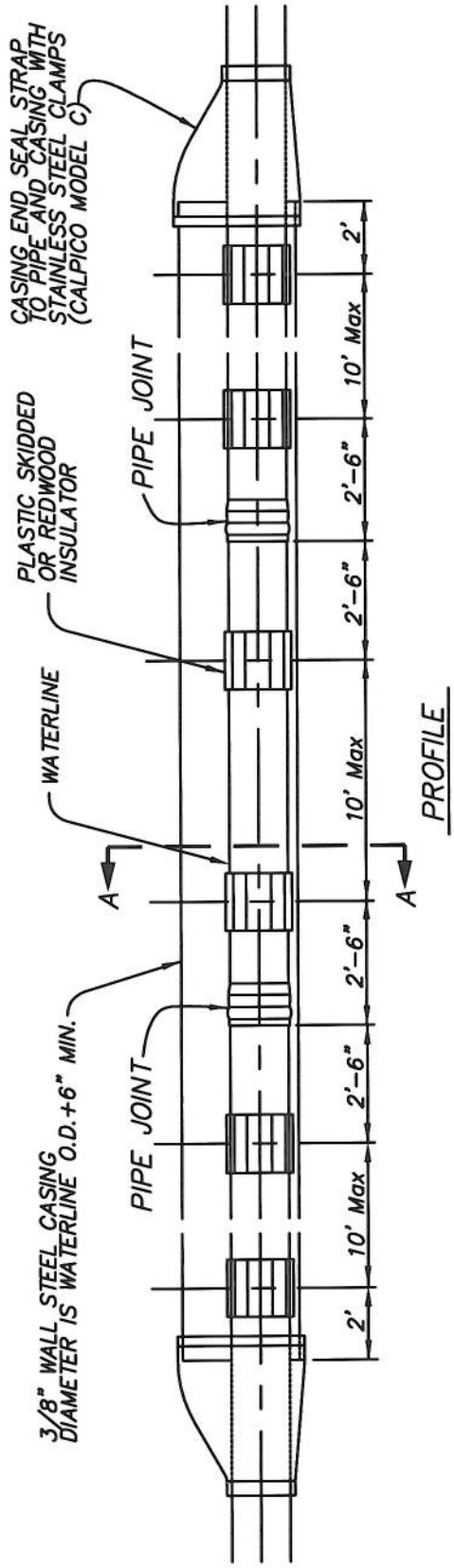

PROFILE

SCHEDULE–STEEL CASING FOR PVC PIPE

NOMINAL INSIDE DIA.	MIN. INSIDE DIA.
6"	12"
8"	16"
10"	20"
12"	24"
16"	30"

WATER RESOURCES DEPARTMENT
CITY OF BAKERSFIELD, CALIFORNIA

PIPE BORE & CASING DETAIL

APPROVED: Art Chanello 6/14/2016
MANAGER – WATER RESOURCES DEPARTMENT DATE

PLATE No. W–7
REV. 1–9–09

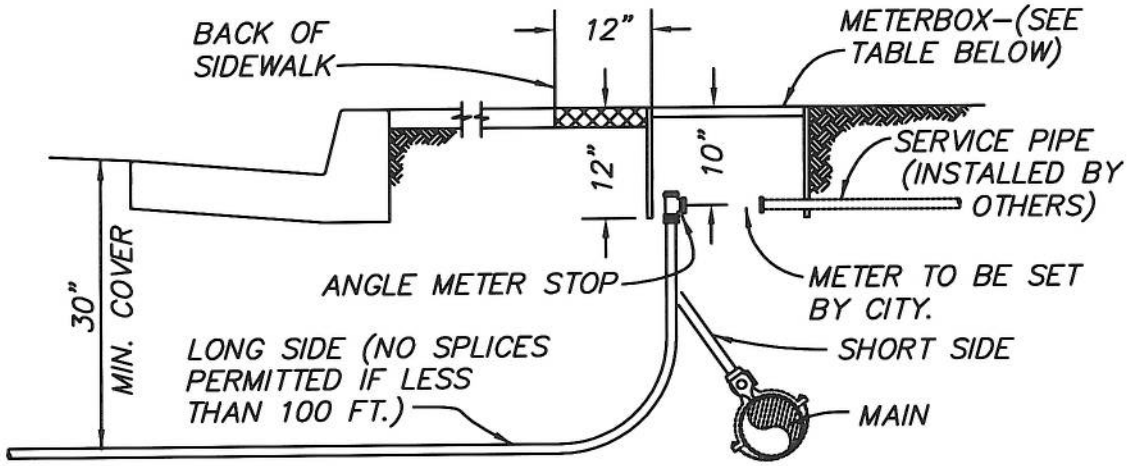

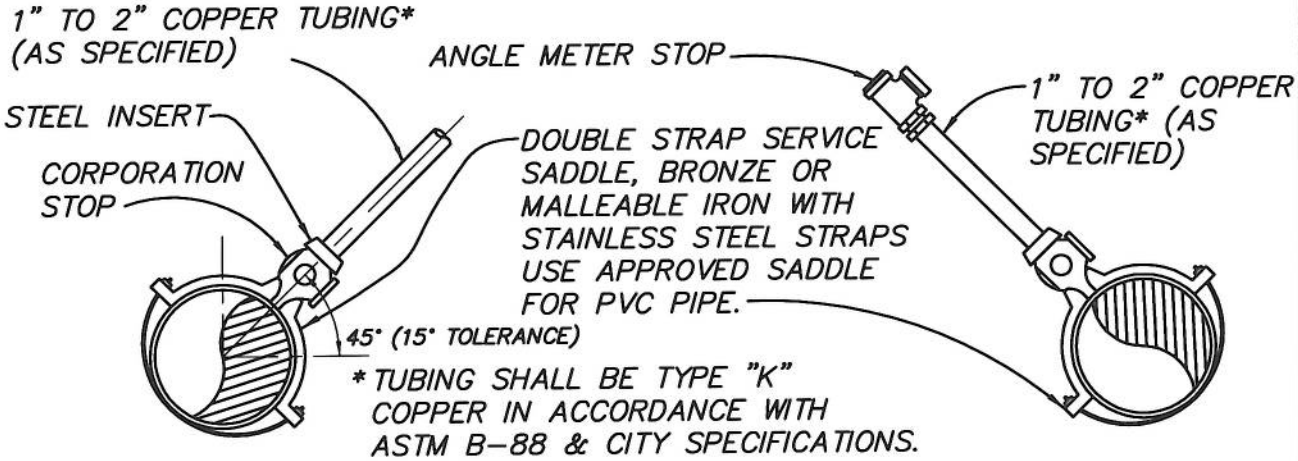

LONG SIDE SERVICE

SHORT SIDE SERVICE

METER SIZE	METER BOX
1"	12"x17"–CHRISTY CONCRETE PRODUCTS, INC – NO. B–12.
1 1/2" AND 2"	17 1/4"x30" CHRISTY CONCRETE PRODUCTS INC. – No. B–36.

NOTES:

1. THE LONG SIDE SERVICE FOR A 1" METER SHALL BE 1" COPPER TUBING AND A 1" METER STOP. ALL 1" TO 2" SHORT SIDE SERVICES SHALL BE OF COPPER TUBING.
2. ALL OTHER SERVICE SIZES SHALL INCORPORATE LIKE SIZES FOR CORPORATION STOPS, COPPER TUBING, ANGLE METER STOPS, AND METER. i.e., A 1–1/2" SHORT OR LONG SERVICE SHALL CONSIST OF 1–1/2" COPPER TUBING, 1–1/2" METER STOP, AND 1–1/2" METER (TO BE INSTALLED BY OTHERS).
3. A TRAFFIC RATED CONCRETE METER BOX IS REQUIRED WHEN SERVICE IS LOCATED IN DRIVEWAY SIDE.
4. TEMPORARY OR PERMANENT BACKFLOW PROTECTION DEVICE MAY BE REQUIRED FOR ANY SERVICE CONNECTION AS DETERMINED BY WATER RESOURCES.

WATER RESOURCES DEPARTMENT
CITY OF BAKERSFIELD, CALIFORNIA

STANDARD SERVICE CONNECTION – 1" TO 2"

APPROVED: 6/14/2016

MANAGER – WATER RESOURCES DEPARTMENT — DATE

PLATE No. W–8

REV. 3–22–16

NOTE:

1. A BACKFLOW PROTECTION DEVICE MAY BE REQUIRED FOR ANY SERVICE CONNECTION AS DETERMINED BY WATER RESOURCES.

ITEM: DIMENSIONS

SERVICE SIZE	ITEM																			
	A	B	C	D	E	F	G	H	I	J	K	L	M	N	O	P	Q	R	S	T
3"	3"	3"	3"	4"	3"	4"	2"	2"	3"	3"	*	4"	3"x2"	4"	4"	–	–	3"	3"	3"
4"	4"	4"	4"	4"	4"	3"	3"	3"	4"	4"	*	4"	4"x3"	4"	4"	–	–	4"	4"	4"
6"	6"	6"	6"	6"	6"	4"	4"	4"	6"	6"	*	6"	6"x4"	6"	6"	–	–	6"	6"	6"

* METER BOX INDICATED IS COMPATIBLE WITH ALL SERVICE SIZES.

EQUIPMENT LIST (SEE TABLE HEREON FOR DIMENSIONS)

ITEM	DESCRIPTION
A	TURBO OR COMPOUND METER WITH STRAINER AS REQUIRED BY THE DEPARTMENT
B	STD. PIPE THREADED ONE END, PLAIN ONE END, 18" LONG, BRASS OR BRONZE.
D	HUB END GATE VALVE WITH VALVE BOX PER DETAIL W-12
E	STD. PIPE, BRASS OR BRONZE.
F	BRASS OR BRONZE SADDLE OR TEE
G	THREADED BRONZE GATE VALVE, WITH VALVE BOX PER DETAIL W-12
H	BRASS OR BRONZE ELL
I	COMPANION FLANGE
J	FLEXIBLE FLANGED COUPLING TYPE 912 SMITH BLAIR
K	#68 BROOKS OR B48 CHRISTY WITH 2 EXTENSIONS & SPLIT COVER WITH READING LID.
L	C900 PVC PIPE
N	DUCTILE IRON ELL
Q	SIDE OUTLET STAINLESS STEEL TAPPING SLEEVE
R	REDUCER (IF NEEDED)
S	PVC MALE ADAPTOR
T	ASTM D2241, D1784 – SDR 21 PVC SERVICE LINE

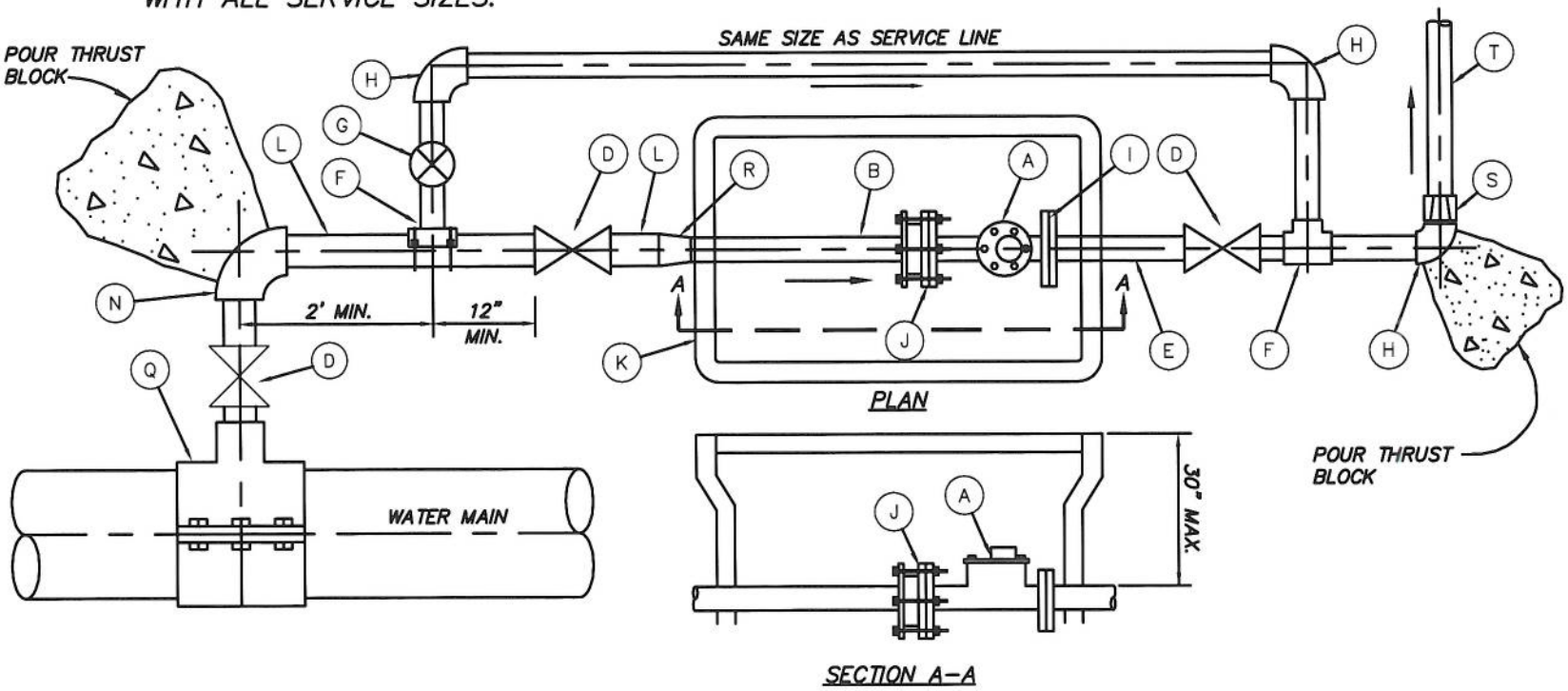

WATER RESOURCES DEPARTMENT
CITY OF BAKERSFIELD, CALIFORNIA

3", 4", & 6" WATER SERVICE DETAIL

APPROVED:

MANAGER – WATER RESOURCES DEPARTMENT

DATE 6/17/2016

PLATE No. W–9

REV. 9–16–14

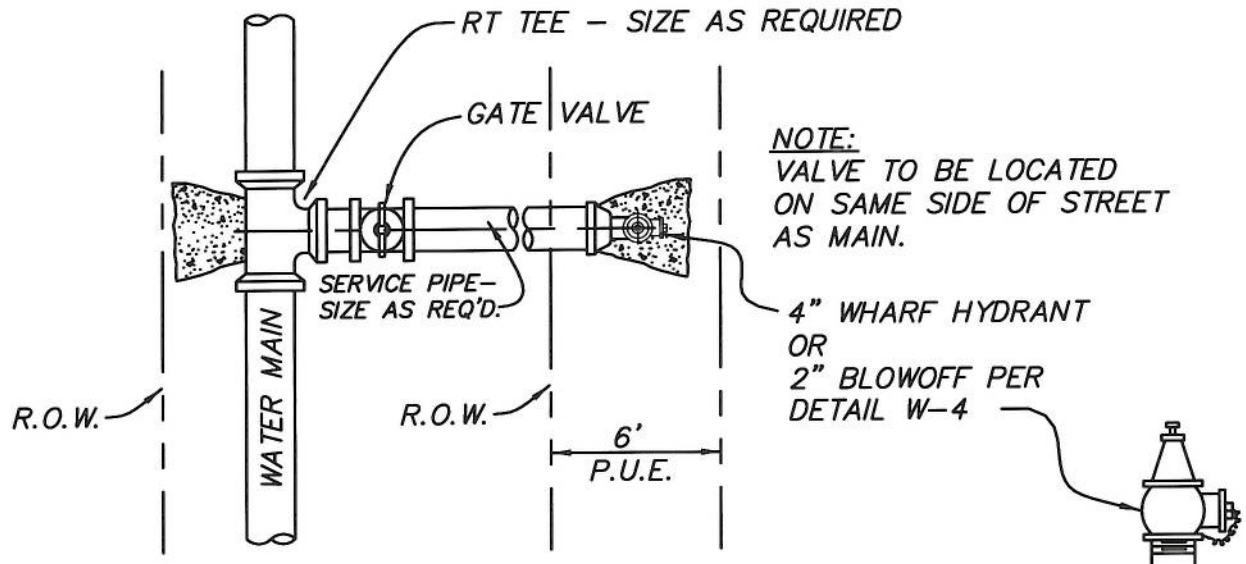

PLAN VIEW

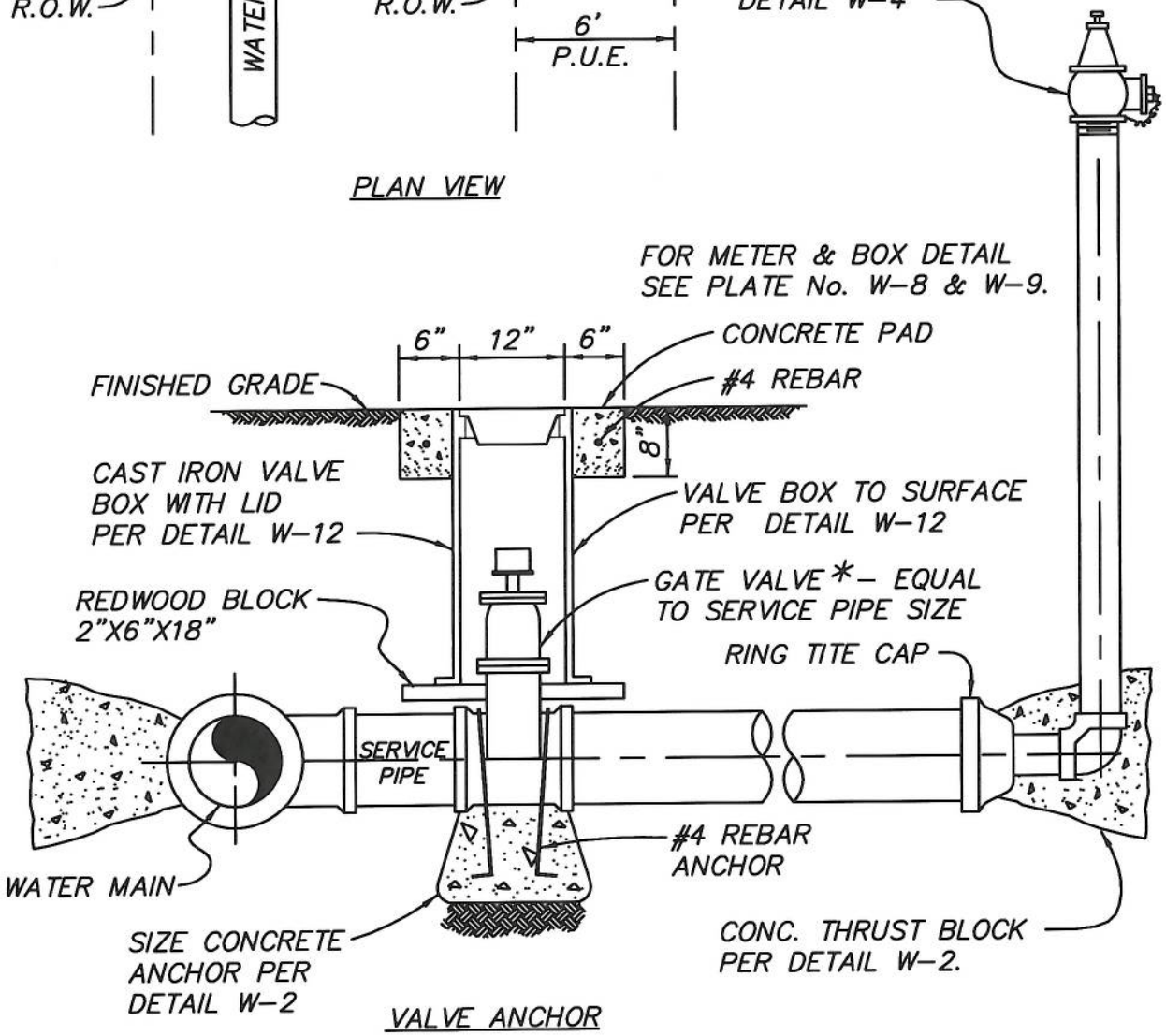

VALVE ANCHOR

*PIPE O.D. GREATER THAN 12" REQUIRE BUTTERFLY VALVE

WATER RESOURCES DEPARTMENT
CITY OF BAKERSFIELD, CALIFORNIA

3" & LARGER TURNOUT

APPROVED: 6/14/2016

MANAGER – WATER RESOURCES DEPARTMENT DATE

PLATE No. W–10

REV. 9–16–14

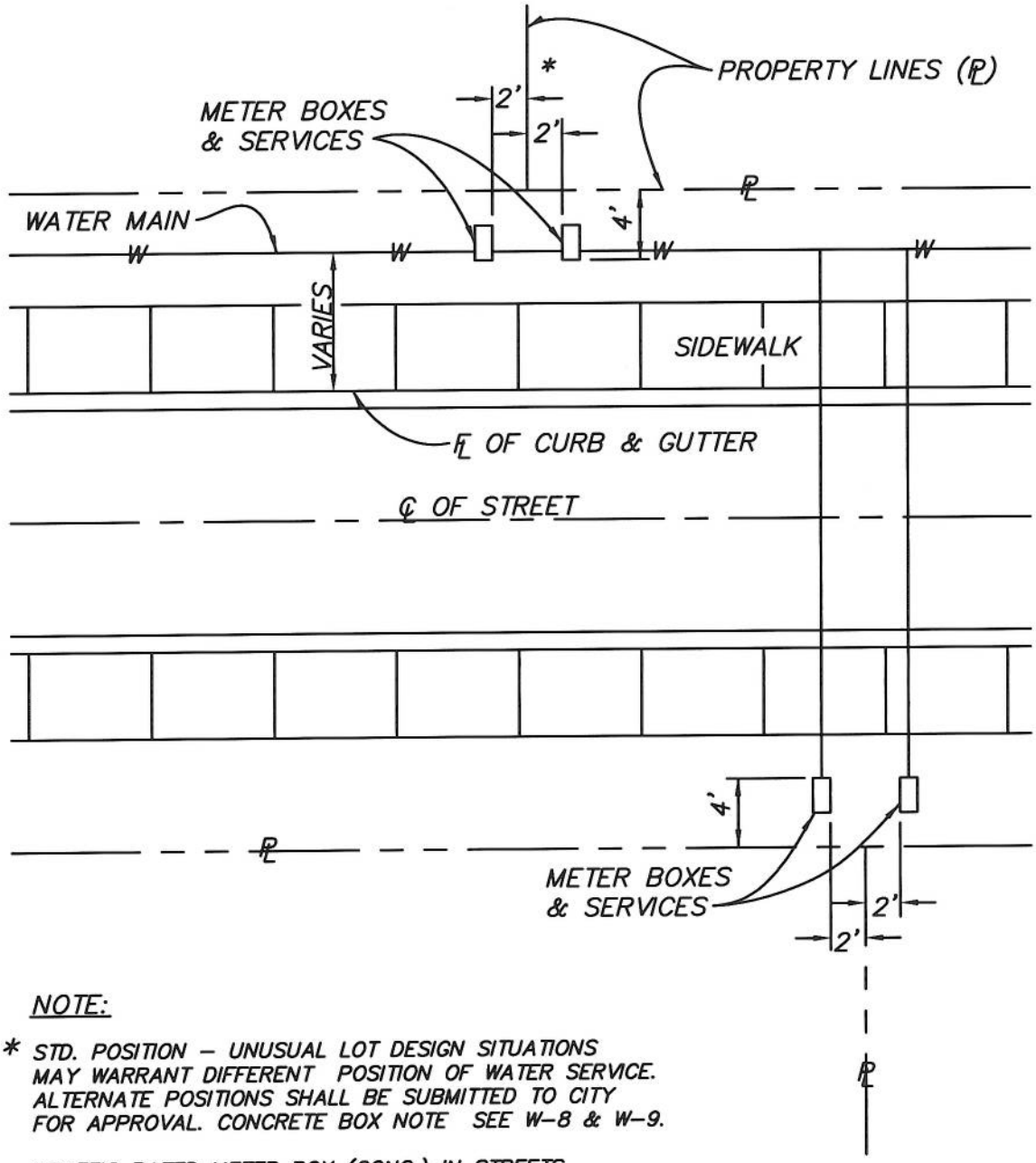

NOTE:

* STD. POSITION – UNUSUAL LOT DESIGN SITUATIONS MAY WARRANT DIFFERENT POSITION OF WATER SERVICE. ALTERNATE POSITIONS SHALL BE SUBMITTED TO CITY FOR APPROVAL. CONCRETE BOX NOTE SEE W-8 & W-9.

TRAFFIC RATED METER BOX (CONC.) IN STREETS OR DRIVEWAYS.

WATER RESOURCES DEPARTMENT
CITY OF BAKERSFIELD, CALIFORNIA

TYPICAL METER BOX LOCATION

APPROVED: 6/14/2016

MANAGER – WATER RESOURCES DEPARTMENT DATE

PLATE No. W-11

REV. 1-9-09

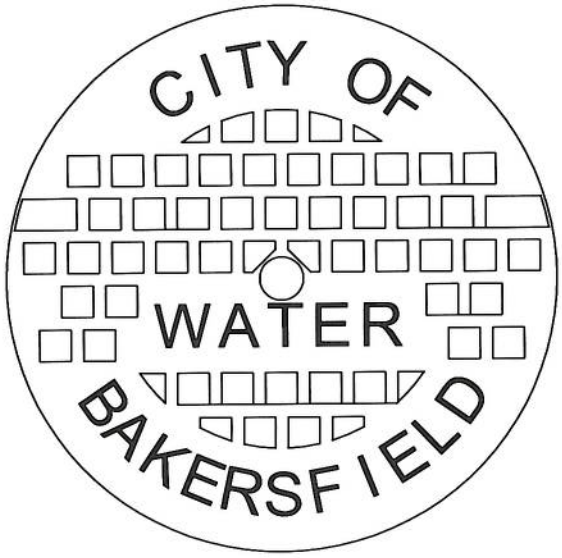

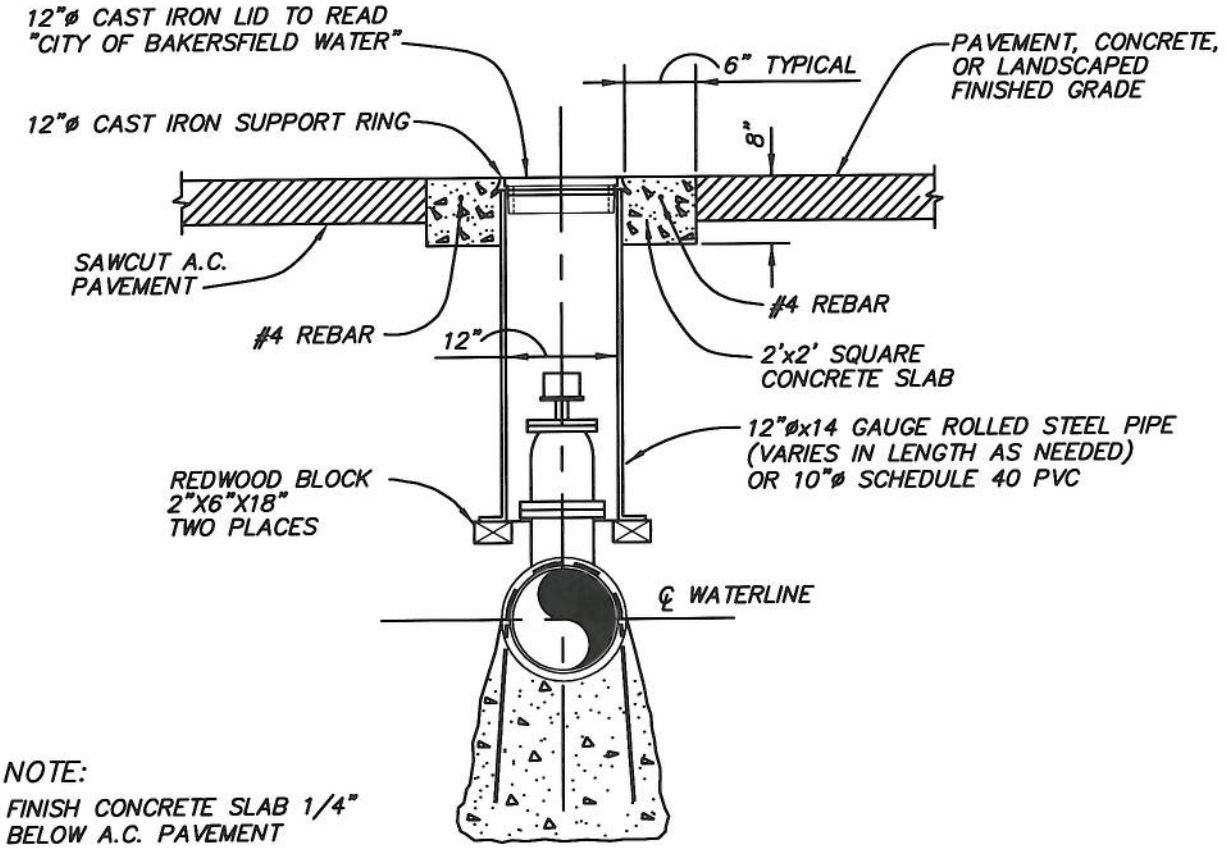

NOTE:
FINISH CONCRETE SLAB 1/4" BELOW A.C. PAVEMENT

PAVEMENT AREA

WATER RESOURCES DEPARTMENT
CITY OF BAKERSFIELD, CALIFORNIA

VALVE BOX DETAIL

APPROVED: 6/14/2016
MANAGER – WATER RESOURCES DEPARTMENT DATE

PLATE No. W–12
REV. 9–16–14

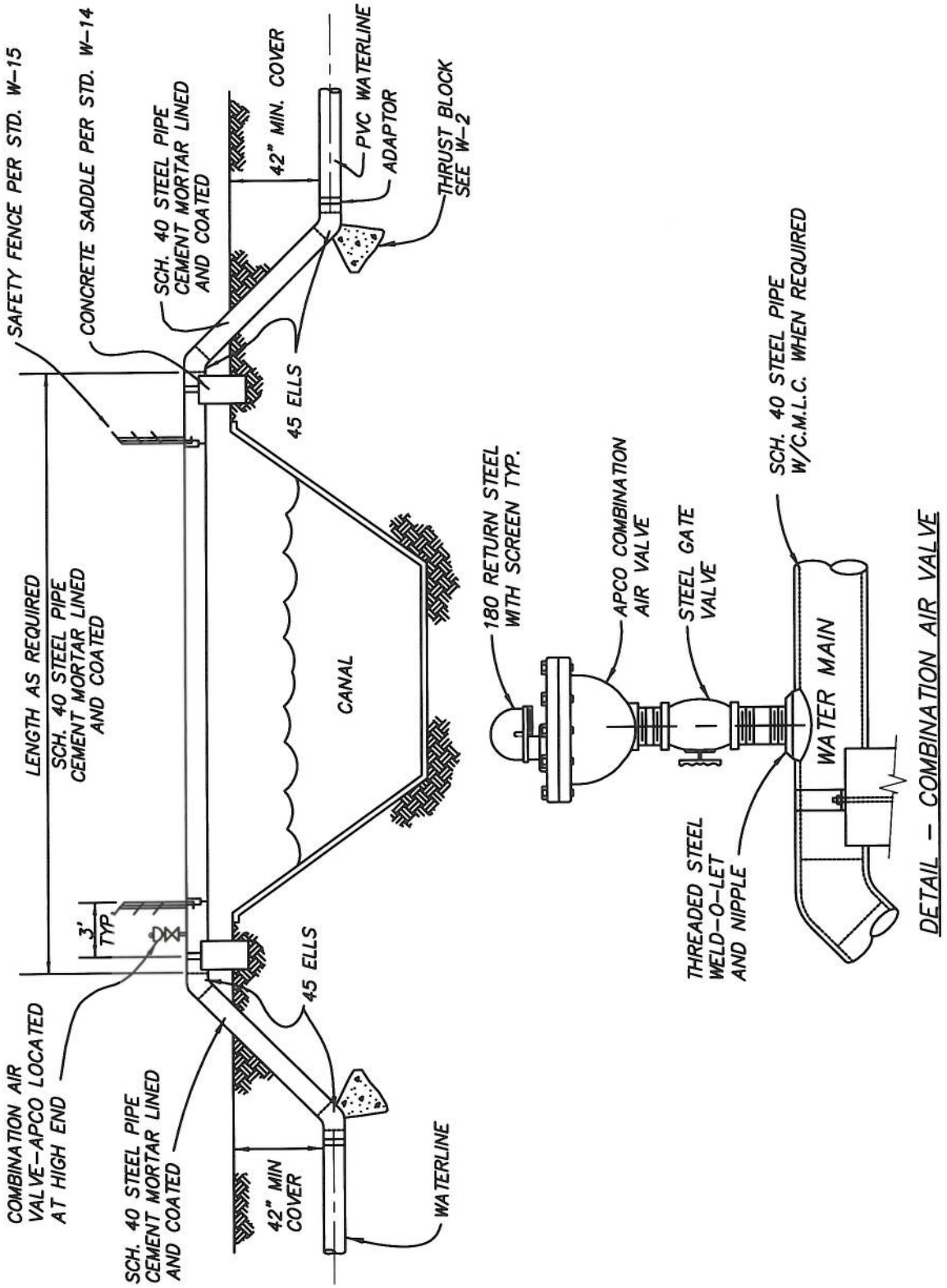

WATER RESOURCES DEPARTMENT
CITY OF BAKERSFIELD, CALIFORNIA

CANAL CROSSING DETAIL

APPROVED: 6/14/2016

MANAGER - WATER RESOURCES DIVISION — DATE

PLATE No. W-13

REV. 1-27-11

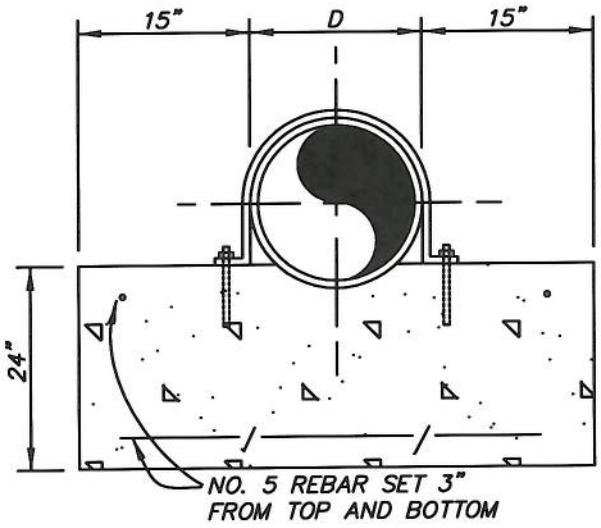

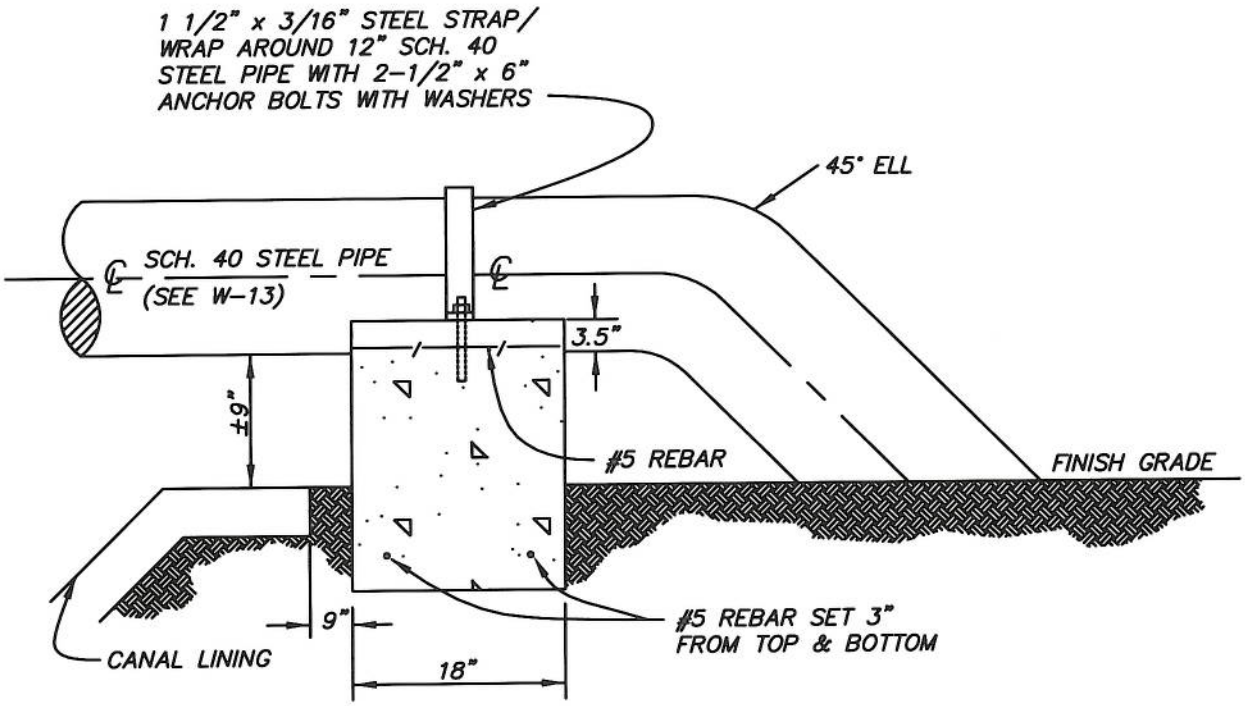

WATER RESOURCES DEPARTMENT
CITY OF BAKERSFIELD, CALIFORNIA

CONCRETE SADDLE DETAIL

APPROVED: 6/14/2016

MANAGER – WATER RESOURCES DIVISION DATE

PLATE No. W-14

REV. 1-9-09

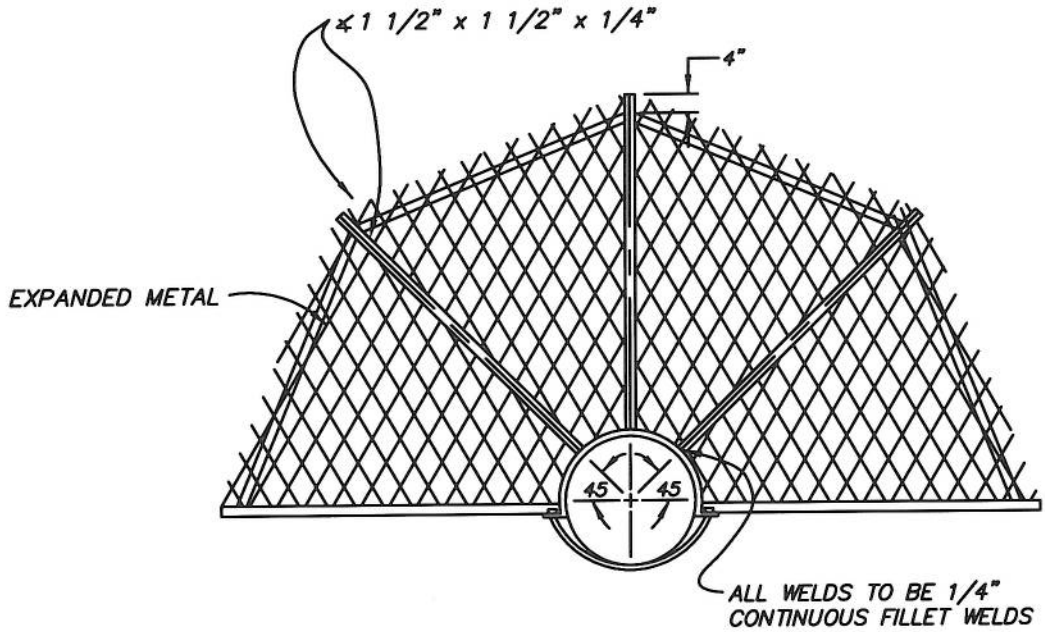

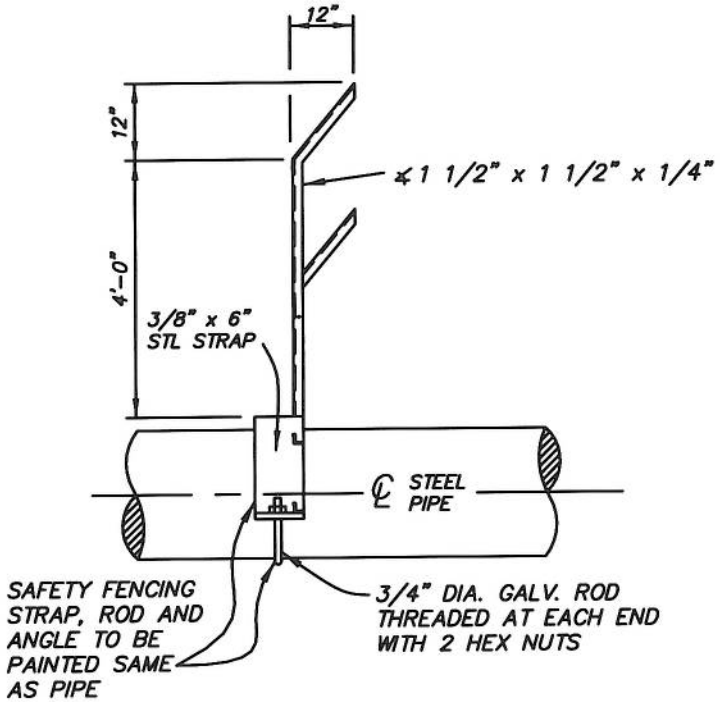

WATER RESOURCES DEPARTMENT
CITY OF BAKERSFIELD, CALIFORNIA

SAFETY FENCE DETAIL

APPROVED: 6/14/2016
MANAGER – WATER RESOURCES DEPARTMENT DATE

PLATE No. W–15
REV. 1–9–09

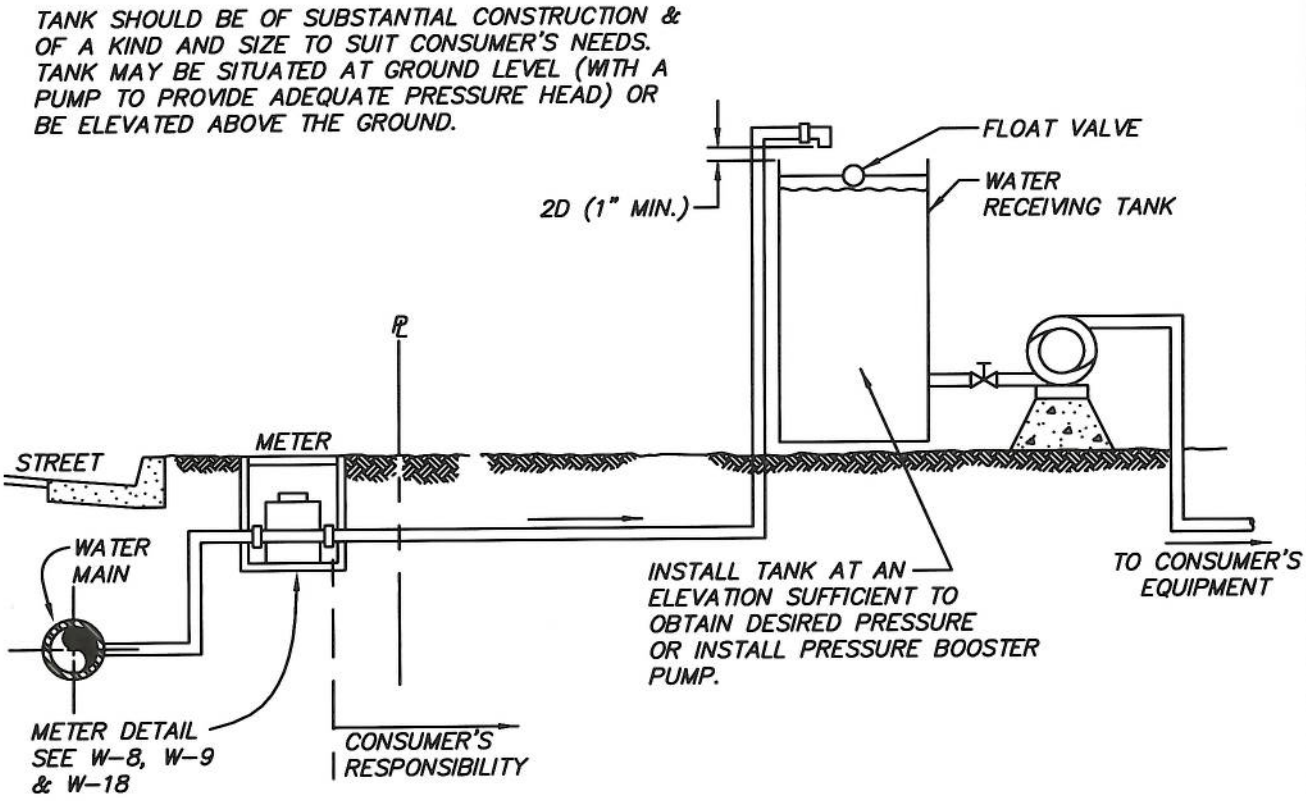

NO IN-LINE BOOSTERS AS REQUIRED BY BAKERSFIELD MUNICIPAL CODE 14.04.240D.

WATER RESOURCES DEPARTMENT
CITY OF BAKERSFIELD, CALIFORNIA

IRRG., FIRE SERV. & WATER SERV, REQUIRING BOOSTER PUMP

APPROVED: 6/14/2016

MANAGER – WATER RESOURCES DEPARTMENT DATE

PLATE No. W–16

REV. 1–9–09

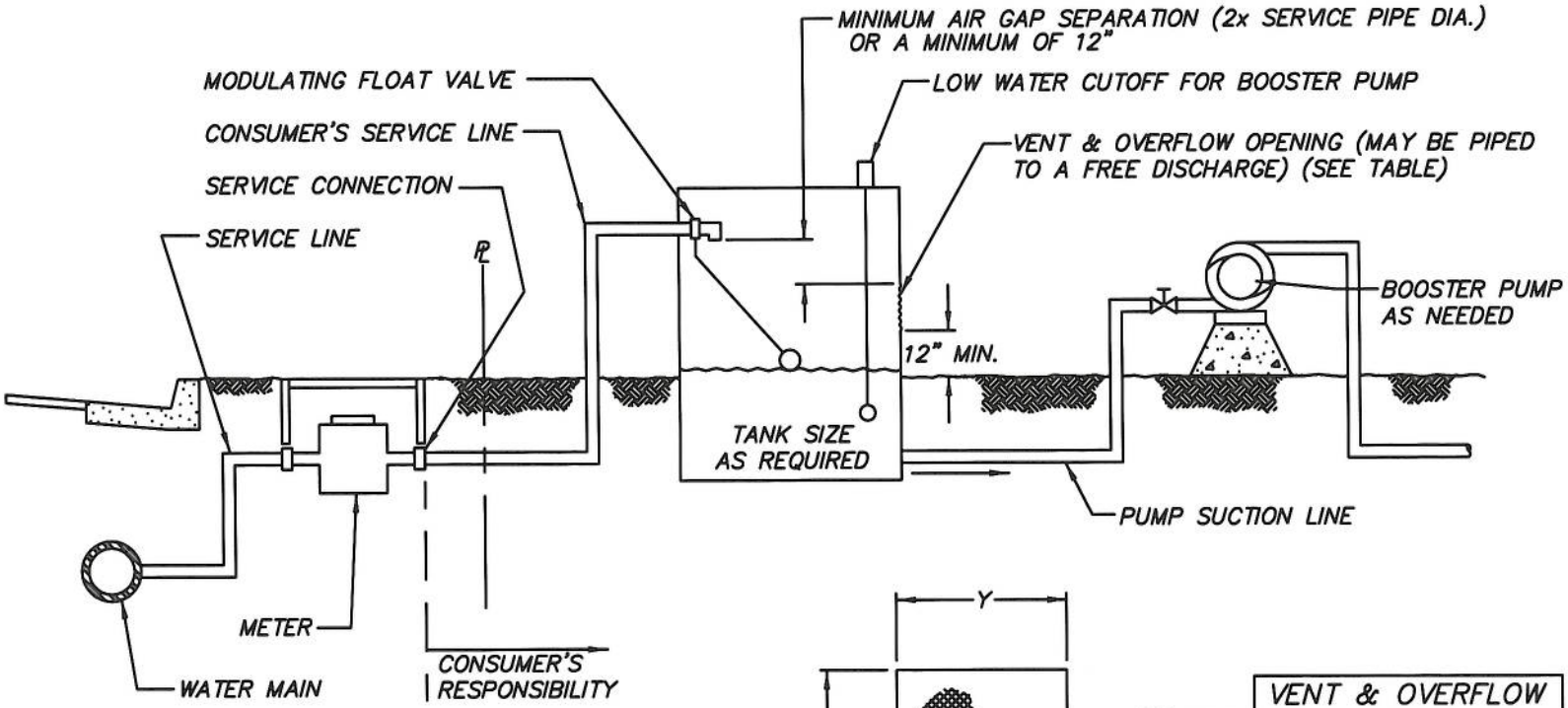

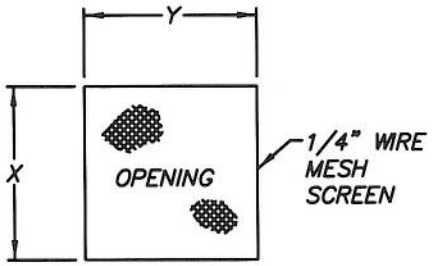

VENT & OVERFLOW

VENT & OVERFLOW TABLE		
SERVICE PIPE SIZE	DIMENSIONS	
	X	Y
3/4"	4"	3"
1"	4"	4 1/2"
1i"	5"	6"
2"	6"	7"
3"	7"	10"
*4"	7"	10"
*6"	7"	15"

* 2 OPENINGS REQUIRED

- DESIGN, FABRICATION, INSTALLATION, AND OPERATION MUST COMPLY WITH STANDARDS OF THE AMERICAN WATER WORKS ASSOCIATION (AWWA) AND ALL FEDERAL, STATE, AND LOCAL LAWS, RULES, REGULATIONS, ORDERS, CODES, AND ORDINANCES.
- NO CONNECTIONS SHALL BE MADE BETWEEN METER AND RECEIVING VESSEL.
- THE OVERFLOW OPENING AND SCREEN SIZE SHALL BE AS SHOWN HEREON OR OF GREATER CAPACITY AS REQUIRED TO MAINTAIN THE SPECIFIED AIR GAP SEPARATION.

WATER RESOURCES DEPARTMENT
CITY OF BAKERSFIELD, CALIFORNIA

ALTERNATE AIR GAP INSTALLATION REQUIREMENTS

APPROVED:

MANAGER – WATER RESOURCES DEPARTMENT

6/14/2016
DATE

PLATE No. W–17
REV. 1–9–09

GENERAL NOTES:

1. INSTALLATION OF "FIRE SERVICE" MAY ONLY BE MADE BY CONTRACTORS WITH A CLASS 'A' OR 'C-34' CONTRACTOR'S LICENSE.
2. BACKFLOW PREVENTION MAY BE REQUIRED BY THE CITY OF BAKERSFIELD.
3. HOT TAP REQUIRES A STAINLESS STEEL TAPPING SLEEVE.

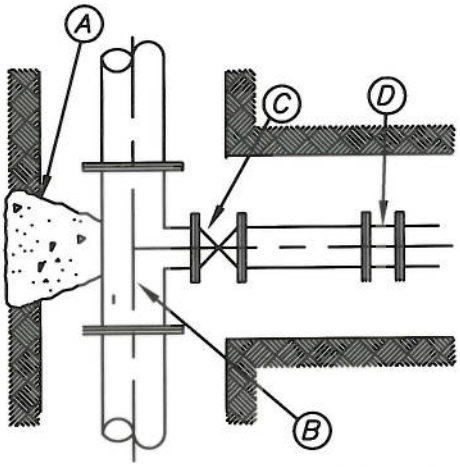

TYPICAL NEW INSTALLATION

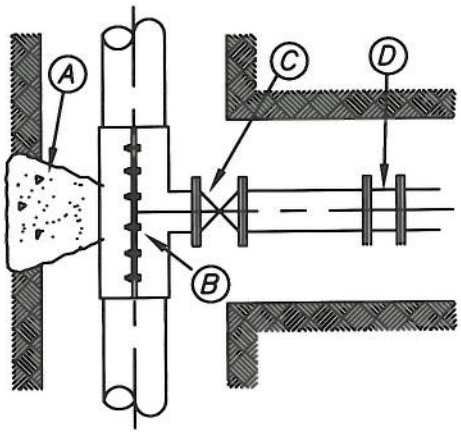

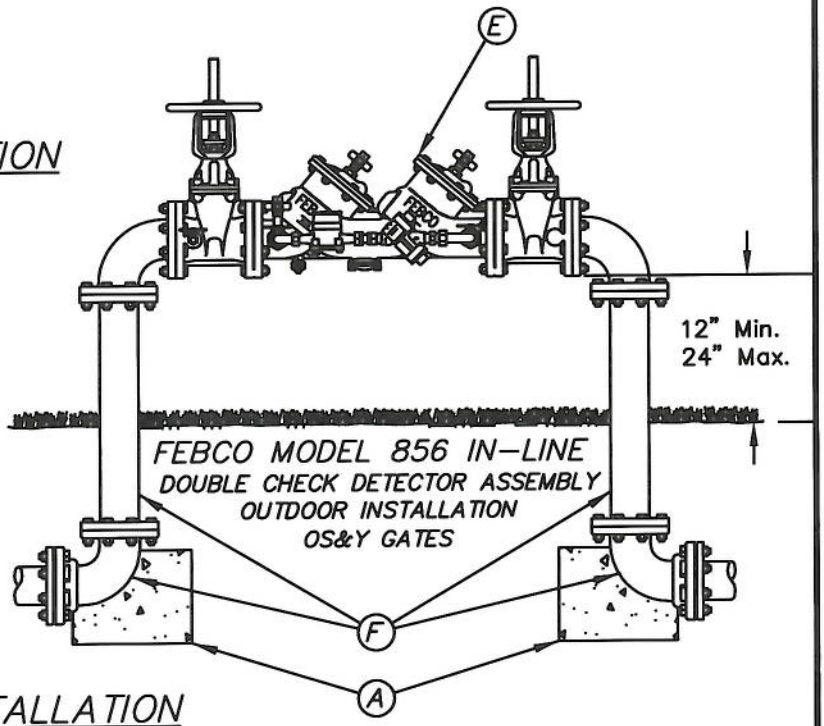

TYPICAL HOT TAP INSTALLATION

CONSTRUCTION NOTES:

ITEM

(A) CONCRETE THRUST BLOCK SHALL BE POURED AGAINST UNDISTURBED GROUND. THRUST BLOCKS SHALL BE CLASS "B" CONCRETE HAVING A MINIMUM OF 5 SACKS PORTLAND CEMENT (470 LBS./CY) & A MINIMUM ULTIMATE COMPRESSIVE STRENGTH OF 3000 psi.

(B) PUSH-ON BY FLANGE TEE – NEW CONSTRUCTION OR APPROVED TAPPING SLEEVE.

(C) FLANGE X PUSH-ON VALVE OR FLANGE X FLANGE VALVE IF INSTALLING A SPOOL. USE C.I. ADJUSTABLE VALVE BOX WITH LOCKING LID.

(D) PUSH ON BY FLANGE ADAPTOR OR M.J. X FLANGE ADAPTOR.

(E) ABOVE GROUND DOUBLE DETECTOR CHECK VALVE (FEBCO MODEL 856 MIN. OR APPROVED EQUAL).

(F) WRAP BURIED DUCTILE IRON, STEEL PIPES, & FITTINGS WITH 8 mil POLYWRAP OR APPROVED EQUAL.

WATER RESOURCES DEPARTMENT
CITY OF BAKERSFIELD, CALIFORNIA

TYPICAL FIRE SERVICE DETAIL

APPROVED: 6/14/2016
MANAGER – WATER RESOURCES DEPARTMENT DATE

PLATE No. W-18
REV. 9-16-14

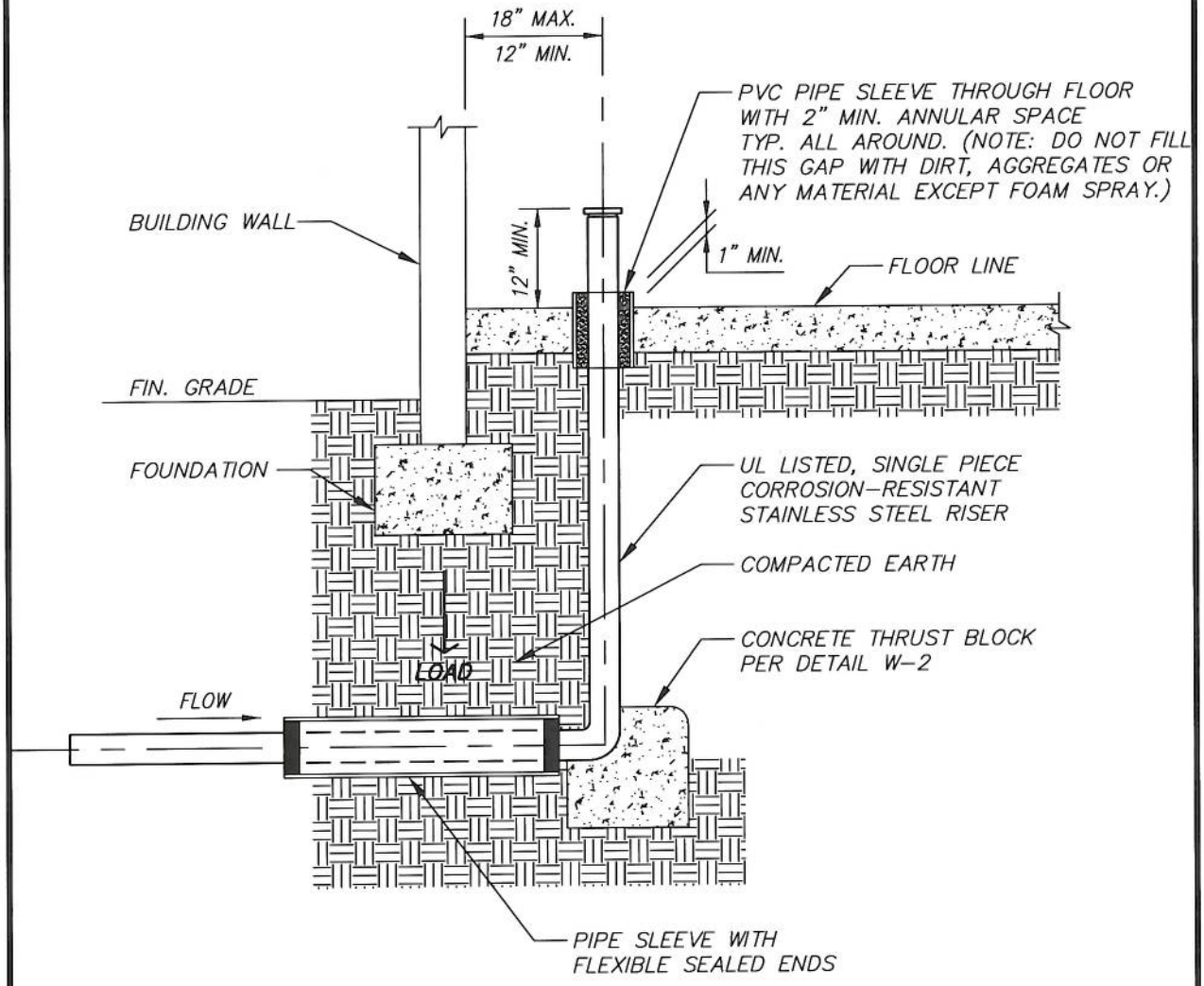

WATER RESOURCES DEPARTMENT
CITY OF BAKERSFIELD, CALIFORNIA

UNDER FOUNDATION RISER DETAIL

APPROVED: Art Chanello 6/14/16
MANAGER – WATER RESOURCES DEPARTMENT DATE

PLATE No. W–19
REV. 9–16–14