Solar PV Standard Plan — Microinverter

SCOPE: Use this plan ONLY for systems using utility-interactive Microinverters or AC Modules (ACM) not exceeding a combined system AC inverter output rating of 10 kW, with a maximum of 3 branch circuits, one PV module per inverter and with PV module ISC maximum of 10-A DC, installed on a roof of a one- or two-family dwelling or accessory structure. The photovoltaic system must interconnect to a single-phase AC service panel of 120/240 Vac with service panel bus bar rating of 225 A or less. This plan is not intended for bipolar systems, hybrid systems or systems that utilize storage batteries, charge controllers or trackers. Systems must be in compliance with current California Building Standards Codes and local amendments of the authority having jurisdiction (AHJ). Other articles of the California Electrical Code (CEC) shall apply as specified in section 690.3.

MANUFACTURER'S SPECIFICATION SHEETS MUST BE PROVIDED for proposed inverters, modules, combiner/junction boxes and racking systems. Installation instructions for bonding and grounding equipment shall be provided and local AHJs may require additional details. Listed and labeled equipment shall be installed and used in accordance with any instructions included in the listing or labeling (CEC 110.3). Equipment intended for use with PV system shall be identified and listed for the application CEC 690.4(D).

Applicant and Site Information

Job Address: _____ Permit #: _____

Contractor/Engineer Name: _____ License # and Class: _____

Signature: _____ Date: _____ Phone Number: _____

1. General Requirements and System Information

☐ Microinverter
Number of PV modules installed: _____
Number of Microinverters installed: _____

☐ AC Module (ACM)
Number of ACMs installed: _____
*Note: Listed Alternating-Current Module (ACM) is defined in **CEC 690.2** and installed per **CEC 690.6***

1.1 Number of Branch Circuits, 1, 2 or 3: _____

1.2 Actual number of Microinverters or ACMs per branch circuit: 1 _____ 2._____ 3._____

1.3 Total AC system power rating = (Total Number of Microinverters or ACMs) * (AC inverter power output) = _____ Watts

1.4 Lowest expected ambient temperature for this plan in Table 1: For -1° to -5° C use 1.12 or for -6° to -10° C use 1.14 correction factors.

1.5 Average ambient high temperature for this plan: = +47° C
Note: For lower expected ambient or higher average ambient high temperatures, use Comprehensive Standard Plan.

2. Microinverter or ACM Information and Ratings

Microinverters with ungrounded DC inputs shall be installed in accordance with CEC 690.35.

Microinverter or ACM Manufacturer: _____

Model: _____

2.1 Rated (continuous) AC output power: _____ Watts

2.2 Nominal AC voltage rating: _____ Volts

2.3 Rated (continuous) AC output current: _____ Amps

If installing ACMs, skip [STEPS 2.4]

2.4 Maximum DC input voltage rating: _____ Volts (limited to 79 V, otherwise use the Comprehensive Standard Plan)

2.5 Maximum AC output overcurrent protection device (OCPD) _____ Amps

2.6 Maximum number of microinverters or ACMs per branch circuit: _____

3. PV Module Information

(If installing ACMs, skip to [STEP 4])

PV Module Manufacturer: _____

Model: _____

Module DC output power under standard test conditions (STC) = _____ Watts

3.1 Module V_{OC} at STC (from module nameplate): _____ Volts

3.2 Module I_{SC} at STC (from module nameplate): _____ Amps

3.3 Adjusted PV Module DC voltage at minimum temperature = [Table 1] _____ [cannot exceed Step 2.4]

Table 1. Module V_{OC} at STC Based on Inverter Maximum DC Input Voltage Derived from CEC 690.7

Microinverter Max. DC Input [STEP 2.4] (Volts)	34	37	40	43	46	49	52	55	58	61	64	67	70	73	76	79
Max. Module VOC @ STC, 1.12 (-1° to -5° C) Correction Factor (Volts)	30.4	33.0	35.7	38.4	41.1	43.8	46.4	49.1	51.8	54.5	57.1	59.8	62.5	65.2	67.9	70.5
Max. Module VOC @ STC, 1.14 (-6° to -10° C) Correction Factor (Volts)	29.8	32.5	35.1	37.7	40.4	43.0	45.6	48.2	50.9	53.5	56.1	58.8	61.4	64.0	66.7	69.3

4. Branch Circuit Output Information

Fill in [Table 3] to describe the branch circuit inverter output conductor and OCPD size. Use [Table 2] for determining the OCPD and Minimum Conductor size.

Table 2. Branch Circuit OCPD and Minimum Conductor Size*

Circuit Current (Amps)	Circuit Power (Watts)	OCPD (Amps)	Minimum Conductor Size (AWG)	Minimum Metal Conduit Size for 6 Current Carrying Conductors
12	2880	15	12	¾”
16	3840	20	10	¾”
20	4800	25	8	1”
24	5760	30	8	1”

*CEC 690.8 and 210.19 (A)(1) factored in Table 2, conductors are copper, insulation must be 90° C wet-rated. Table 2 values are based on maximum ambient temperature of 69° C, which includes 22° C adder, exposed to direct sunlight, mounted > 0.5 inches above rooftop, ≤ 6 current carrying conductors (3 circuits) in a circular raceway. Otherwise use Comprehensive Standard Plan.

Table 3. PV Array Configuration Summary			
	Branch 1	Branch 2	Branch 3
Number of Microinverters or ACMs [Step 1]			
Selected Conductor Size [Table 2] (AWG)			
Selected Branch and Inverter Output OCPD [Table 2]			

5. Solar Load Center (if used)

5.1 Solar Load Center is to have a bus bar rating not less than 100 Amps. Otherwise use Comprehensive Standard Plan.

5.2 Circuit Power see [STEP 1] =_____ Watts

5.3 Circuit Current = (Circuit Power) / (AC voltage) = _____ Amps

Table 4. Solar Load Center and Total Inverter Output OCPD and Conductor Size**				
Circuit Current (Amps)	Circuit Power (Watts)	OCPD (Amps)	Minimum Conductor Size (AWG)	Minimum Metal Conduit Size
24	5760	30	10	½”
28	6720	35	8	¾”
32	7680	40	8	¾”
36	8640	45	8	¾”
40	9600	50	8	¾”
41.6	≤ 10000	60	6	¾”

**CEC 690.8 and 210.19 (A)(1) factored in Table 4, conductors are copper, insulation must be 90° C wet-rated. Table 4 values are based on maximum ambient temperature of 47° C (no rooftop temperature adder in this calculation), ≤ 3 current carrying conductors in a circular raceway. Otherwise use Comprehensive Standard Plan.

6. Point of Connection to Utility:

6.1 Load Side Connection only! Otherwise use the Comprehensive Standard Plan.

6.2 Is the PV OCPD positioned at the opposite end from input feeder location or main OCPD location?
☐ Yes ☐ No (If No, then use 100% row in Table 5)

6.3 Per 705.12(D)(2): (Combined inverter output OCPD size + Main OCPD size) ≤ [bus bar size × (100% or 120%)]

Table 5. Maximum Combined Inverter Output CIrcuit OCPD									
Bus Bar Size (Amps)	100	125	125	200	200	200	225	225	225
Main OCPD (Amps)	100	100	125	150	175	200	175	200	225
Maximum Combined Inverter OCPD with 120% of bus bar rating (Amps)	20	50	25	60†	60†	40	60†	60†	45
Maximum Combined Inverter OCPD with 100% of bus bar rating (Amps)	0	25	0	50	25	0	50	25	0

†This plan limits the maximum system size to less than 10 kW, therefore the OCPD size is limited to 60 A. Reduction of Main Breaker is not permitted with this plan.

7. Grounding and Bonding

Check one of the boxes for whether system is grounded or ungrounded: ☐ Grounded ☐ Ungrounded

For Microinverters with a grounded DC input, systems must follow the requirements of GEC (CEC 690.47) and EGC (CEC 690.43).

For ACM systems and Microinverters with ungrounded a DC input follow the EGC requirements of (CEC 690.43).

8. Markings

Informational note: ANSI Z535.4 provides guidelines for the design of safety signs and labels for application to products. A phenolic plaque with contrasting colors between the text and background would meet the intent of the code for permanency. No type size is specified, but 20 point (3/8”) should be considered the minimum.

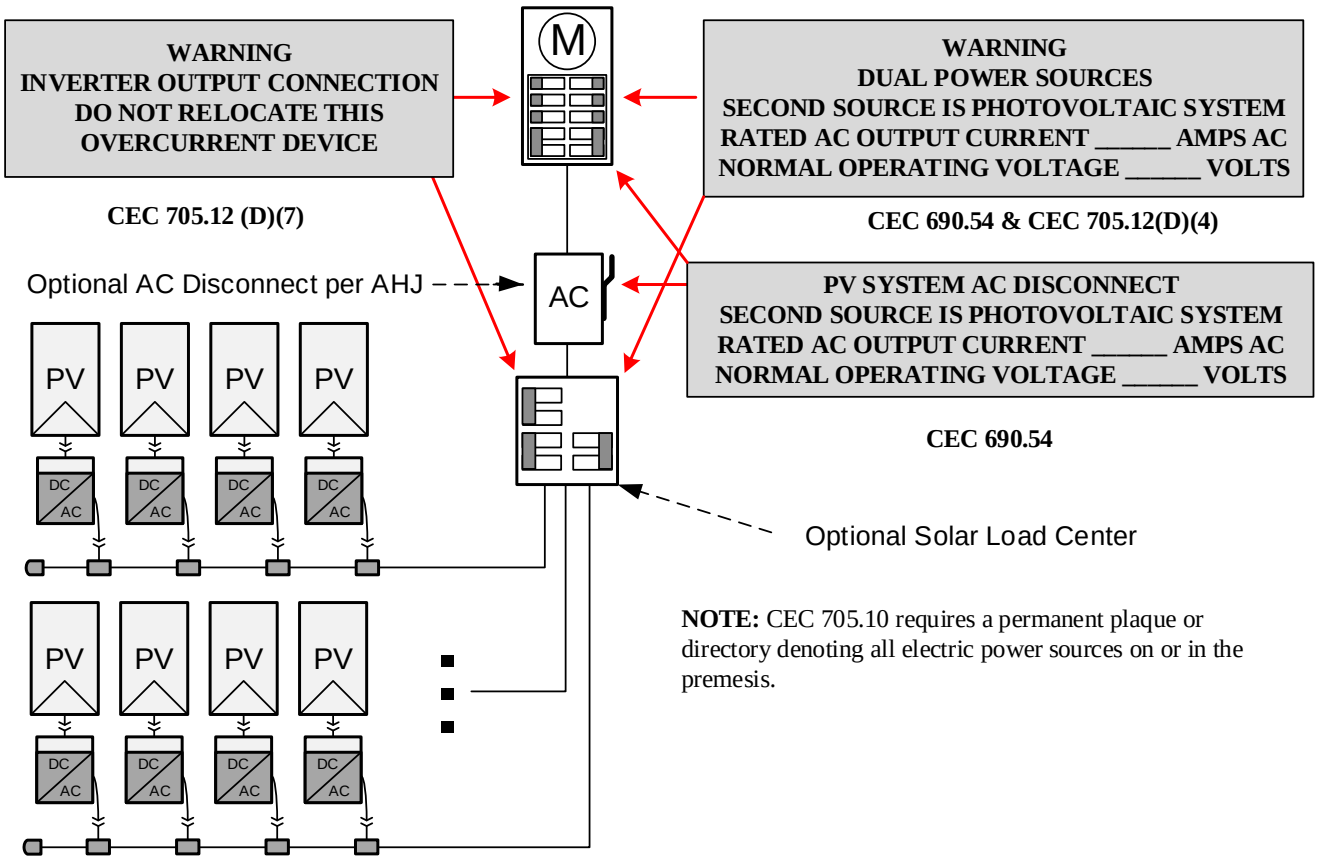

Solar PV Standard Plan — Simplified
Central/String Inverter Systems for One- and Two-Family Dwellings

9. Single-Inverter Line Diagram

Equipment Schedule

TAG	DESCRIPTION: (Provide model # if provided)
1	Solar PV Module or ACM:
2	Microinverter (if not ACM):
3	Junction Box (es):
4	Solar Load Center, Yes / No:
5	Performance Meter Yes / No:
6	*Utility External Disconnect Switch Yes / No:
7	Main Electrical Service Panel

Single-Line Diagram for Microinverters or ACMs

Check a box for dc system grounding: ☐ Grounded, ☐ Ungrounded
For ungrounded dc power systems, EGC is required
For grounded dc power systems, GEC & EGC are required
Refer to CEC 250.120 for EGC installation & Table 250.122 for sizing

* Consult with your local AHJ and /or Utility

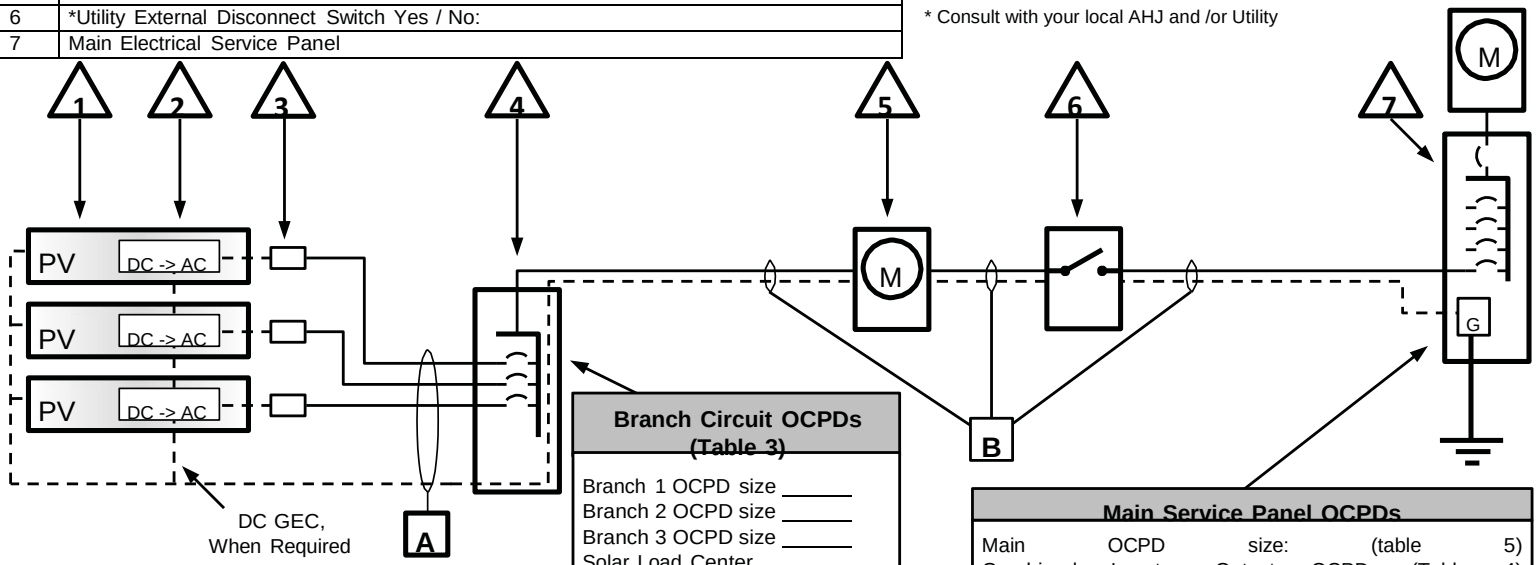

Branch Circuit OCPDs (Table 3)

Branch 1 OCPD size _____
Branch 2 OCPD size _____
Branch 3 OCPD size _____
Solar Load Center Busbar(Section 5) _____

Main Service Panel OCPDs

Main OCPD size: (table 5)
Combined Inverter Output OCPD: (Table 4)
Main Service Panel Busbar: (Table 5)

Conductor, Cable and Conduit Schedule

☐ TAG	Description and Conductor Type: (Table 3)	Conductor Size	Number of Conductors	Conduit/ Conductor/ Cable Type	Conduit Size
A	Current-Carrying Conductors: (for each branch circuit)				
	EGC:				
	GEC (when required):				
B	Current-Carrying Conductors:				
	EGC:				
	GEC (when required):				

SOLAR PV STANDARD PLAN - SIMPLIFIED

Microinverter and ACM Systems for One- and Two-Family Dwellings

ROOF LAYOUT PLAN

Items required: roof layout of all panels, modules, clear access pathways and approximate locations of electrical disconnecting means and roof access points.